IDP-15BV

DRILL PRESS

Original:

GB
Operating Instructions

JPW (Tool) AG
Tämperlistrasse 5
CH-8117 Fällanden
Switzerland
Phone +41 44 806 47 48
Fax +41 44 806 47 58

www.jettools.com

M-50000986M 2017-05

CE-Conformity Declaration
CE-Konformitätserklärung
Déclaration de Conformité CE

Product / Produkt / Produit:
Drill Press
Säulenbohrmaschine
Perceuse à colonne

IDP-15BV

Brand / Marke / Marque:

JET

Manufacturer / Hersteller / Fabricant:
JPW (Tool) AG, Tämperlistrasse 5, CH-8117 Fällanden
Schweiz / Suisse / Switzerland

We hereby declare that this product complies with the regulations
Wir erklären hiermit, dass dieses Produkt der folgenden Richtlinie entspricht
Par la présente, nous déclarons que ce produit correspond aux directives suivantes

2006/42/EC
Machinery Directive
Maschinenrichtlinie
Directive Machines

2014/30/EU
electromagnetic compatibility
elektromagnetische Verträglichkeit
compatibilité électromagnétique

designed in consideration of the standards
und entsprechend folgender zusätzlicher Normen entwickelt wurde
et été développé dans le respect des normes complémentaires suivantes

EN ISO 12100:2010

EN 12717:2001+A1:2009

EN 60204-1:2006+A1:2009

EN 61000-6-2:2005

EN 61000-6-4:2007+A1:2011

Responsible for the Documentation / Dokumentations-Verantwortung / Résponsabilité de Documentation:

Hansjörg Meier

Head Product-Mgmt. / Leiter Produkt-Mgmt. / Resp. Gestion des Produits
JPW (Tool) AG

2017-05-17 Alain Schmid, General Manager

JPW (Tool) AG, Tämperlistrasse 5, CH-8117 Fällanden
Schweiz / Suisse / Switzerland

EN – ENGLISH
NOTE:

1.0 Special Safety Rules For Drill Press:

1. Caution : This drill press is intended for use only with drill bits. This use of other accessories may be hazardous.
2. Correct drilling speeds : Factors which determine the best speed to use in any drill press operation are : Kind of material being worked, size of hold, type of drill or other cutter, and quality of cut desired. The smaller the drill, the greater the required RPM. In soft materials, the speed should be higher than for hard metals.
3. Drilling in metal: Use clamps to hold the work when frilling in metal. The work should never be held
4. in there bare hand, the flutes of the drill may seize the work at any time, especially when breaking through the stock. If the piece is whirled out of the operator's hand, he may be injured, in any case, the drill will be broken when the work strikes the column.
5. The work must be clamped firmly while drilling : Any tilting, twisting, or shifting results not only in a rough hole, but also increases drill breakage. For flat work, lay the piece on a wooden base and clamp it firmly down against the table to prevent it from turning. If the piece is of irregular shape and cannot be laid flat in the table, it should be securely blocked and clamped.
6. The chuck shall be securely fastened to the spindle and so that it can't separate from spindle.
7. Remove Key from chuck after adjustment.
8. The tool is to be disconnected from the power supply while the motor is being mounted, connected or reconnected.
9. Secure the tool to the supporting structure if, during normal operation, there is any tendency for the tool to tip over, slide, or walk on the supporting surface.
10. The set screws of head frame should be screwed tightly before suing this machine.
11. Connect to a supply circuit protected by a circuit breaker or time delay fuse.
12. Fasten base to floor or worktable before using the drill press.

2.0 VII. Important Notice For CE

Handling of Machine

1. The total weight of this machine must be ensured before handling.
2. It is better to handle this machine with the help of lifting tools.

Environment Requirements for Installation

1. Be sure to provide sufficient light for operation according to the codes or regulations published for local area. If you do not get the information about lighting, a light intensity of 300 Lux is the least value to be supplied.
2. The place where machine install must be flat and big enough for the operation.

Noise Level

1. The noise level of this machine is about 75 db(A)during operation.
2. While taking provisions for the risk of noise, the noise level of working environment should be taken into consideration also.

3.0 VII Electric

ELECTRICAL CONNECTION/DISCONNECTION & OPERATION

For three phase :

1. **Electrical connection:**
   1. A cable with four wires is equipped to connect your machine into the 3 phase power supply. ***Please connect your machine into the power supply with hand-operated disconnecting device,*** which is in compliance with subclause 5.3 of EN 60204-1, such as on fuse breaker or plug/socket combination.
   2. For the protection of control device, we recommend the operation to supply ***a fuse with 6 A current rating of fuse,*** and the total length between fuse and connection terminal shall not exceed 1.5m.
   3. The ***exact power source voltage, frequency, and number of phase*** shall be checked according to the installation diagram and circuit diagram.
   4. ***The correct direction of drilling press should be checked after connecting.***

2. **Electrical disconnection:**
   1. The disconnection is carried out by hand-operated disconnection device.
   2. Be sure to disconnect this machining from power source, when you want to stop the job, Maintenance, and adjustment.

3. **Grounding**

The grounding of the drilling press is carried out ***by connecting the Yellow/Green terminal of supply cable*** to the grounding terminal of power source. Be sure to ground your machine before connecting machine to power source in any situation.

WARNING !

Do not disconnect grounding terminal before disconnecting power source.

For single phase :

1. The connect, disconnection, and grounding is carried out ***through the plug,*** equipped on the drilling press. For the safety reason, ***Do not change this plug into any the other type in any situation.***
2. For the protection of control device, we recommend the operated to supply ***a fuse with 8 A current rating of fuse,*** and the total length between buse and connection terminal shall not exceed 1.5m.
3. The ***exact power source voltage, frequency, and number of phase*** shall be checked according to the installation diagram and circuit diagram.

Operation:

1. ***"START"*** : Push the button marked with **" I "**.
2. ***"STOP"***: Push the button marked with **" O ".**
3. ***"Interlock Switch"***: Limit switch in the pulley cover.
4. ***"Limited Switch***": Chuck guard disconnection
5. ***"Emergency Switch"*****:** Button with **"RED"**

WARNING !

Do not stop machine with interlock switch in normal operation.

1.0 SPECIAL SAFETY RULES FOR DRILL PRESS: 3
2.0 VII. IMPORTANT NOTICE FOR CE 3
3.0 VII ELECTRIC 4
4.0 SPECIFICATIONS 6
5.0 SETUP AND ASSEMBLY 8
5.1 **UNPACKING AND CLEANUP** 8
5.2 **SHIPPING CONTENTS** 8
5.3 **TOOLS REQUIRED FOR ASSEMBLY:** 8
5.4 **ASSEMBLY** 8
*5.4.1 **Chuck and arbor installation*** *8*
*5.4.2 **Chuck and arbor removal*** *8*
*5.4.3 **Wrench and key storage*** *8*
6.0 ELECTRICAL CONNECTIONS 9
6.1 **GROUNDING INSTRUCTIONS** 9
6.2 **EXTENSION CORDS** 9
7.0 ADJUSTMENTS 9
7.1 **DEPTH STOP ADJUSTMENT** 9
7.2 **RETURN SPRING ADJUSTMENT** 10
7.3 **TABLE TILT ADJUSTMENT** 10
8.0 OPERATING CONTROLS 10
9.0 OPERATION 10
10.0 USER-MAINTENANCE 11
10.1 **LUBRICATION** 11
11.0 TROUBLESHOOTING IDP-15BV 12
12.0 REPLACEMENT PARTS 13
12.1.1 IDP-15BV DRILL PRESS – EXPLODED VIEW 14
12.1.2 IDP-15BV DRILL PRESS – PARTS LIST 15
13.0 ELECTRICAL CONNECTIONS FOR IDP-15BV 17

4.0 Specifications

Model number	IDP-15BV
Stock number	50000986M

Motor and electrical:

Motor type	totally enclosed fan cooled, induction
Horsepower	1HP
Voltage	230V
Cycle	50Hz
Listed FLA (full load amps)	14A
Starting amps	6.8A
Running amps (no load)	6.2A
Power transfer	V-belt
On/Off switch	push button
Motor speed	2000 RPM
Main power cord	H05VVF-3G 0.75mm^2 VDE(300cm) with Plug
Recommended circuit size [1]	10A
Sound emission	70dB at 40in. without load

Head and Capacities:

Swing[2]	370mm
Chuck style and shank capacity	keyed 16mm
Chuck arbor taper	JT-3 to MT2
Spindle taper	MT2
Spindle travel, maximum	85mm
Spindle travel per one revolution of handle	78mm
Quill diameter	52mm
Number of spindle speeds	Variable speed change
Maximum no-load speed range	450~2000 RPM
Maximum spindle to table distance	470mm
Maximum spindle to base distance	640mm
Maximum chuck to table distance	381mm
Maximum chuck to base distance	551mm
Drilling capacity, cast iron	20mm
Drilling capacity, mild steel	16mm

Materials:

Head	cast iron
Table	milling cast iron
Column	steel Forming
Base	cast iron

Table:

Table Size	278 x 285mm
Table slots, number of	4
Table slots, general size (WxD)	13 x 25.4mm
Slot dimensions (WxD)	15 x 115mm
Table tilt	45 deg. L and R
Table rotation around colum	360 deg.
Table elevating system	worm gear with rack
Recommended maximum weight on table	50Kg

[1] *Subject to local and national electrical codes*

[2] *Swing is twice the distance from column to spindle center (i.e., the maximum diameter of workpiece that can be drilled to its center).*

Base and Column:

Base size (LxWxH)	450 x 268 x 50mm
Base working surface	250 x 210mm
Base slots, number of	2
Base slots, general size (WxD)	14.6 x 125mm
Slot dimensions (WxD)	15 x 115mm
Distance between base slots (centers)	130mm
Column diameter	73mm

Dimension and Weights:

Overall dimensions, assembled	565 x 350 x 980mm
Net weight (approximate)	51 kg
Shipping weight (approximate)	53.6kg

L = length; W = width; H= height; D= depth

The specifications in this manual were current at time of publication, but because of our policy of continuous improvement, JET reserves the right to change specifications at any time and without prior notice, without incurring obligations.

⚠WARNING Read and understand the entire contents of this manual before attempting assembly or operation. Failure to comply may cause serious injury.

5.0 Setup and assembly

5.1 Unpacking and cleanup

Remove all contents from shipping carton and compare parts to the contents list in this manual. If shipping damage or any part shortages are identified, contact your distributor. Do not discard carton or packing material until drill press is assembled and running satisfactorily.

Clean all rust protected surfaces with kerosene or a light solvent. Do not use lacquer thinner, paint thinner or gasoline, as these can damage plastic components and painted surfaces.

5.2 Shipping contents

Carton contents

1 Drill press
1 Crank handle
3 Feed handles
1 Chuck and key
1 Arbor
1 Wrench
1 Drift key
2 Hex wrenches – 3mm, 5mm
1 Owner's manual
1 Warranty registration card

5.3 Tools required for assembly:

3mm hex wrench (provided)
Rubber mallet

5.4 Assembly

1. Install 3 feed handles into hub (D, Figure 6-2).
2. Install crank handle on shaft of table bracket, and tighten set screw with 3mm hex wrench. (Figure 6-1)

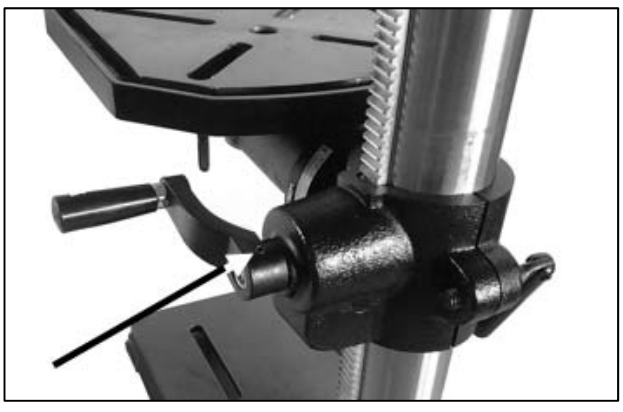

Figure 6-1: installing crank handle

5.4.1 Chuck and arbor installation

1. Thoroughly clean arbor (A, Figure 6-2), chuck (B) and spindle (C). Any grease or residue in these areas can cause the pieces to separate and create a safety hazard as well as damage to the tool.

Twist chuck to retract chuck jaws if they are exposed.

Push chuck (B) by hand onto arbor (A), and slide assembly firmly up into spindle (C).

Turn arbor and chuck assembly until tang (A_1) on arbor engages slot at end of spindle.

Use one or two sharp taps from a rubber mallet, or a hammer and a block of wood, against bottom of chuck to seat chuck securely onto arbor.

⚠CAUTION Do not use a steel hammer directly against chuck, as this may damage chuck.

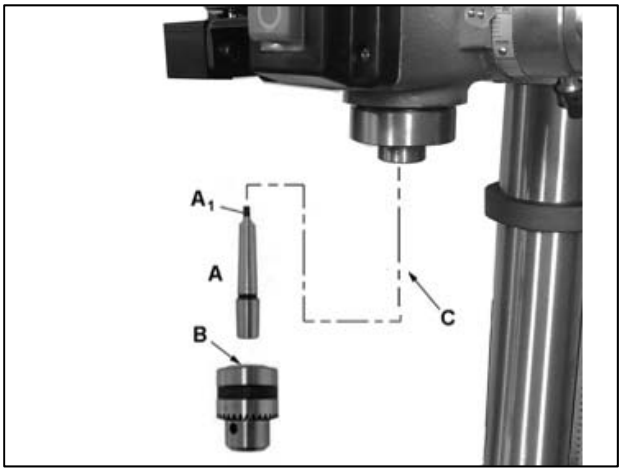

Figure 6-2: installing chuck and arbor

5.4.2 Chuck and arbor removal

1. Unplug machine from power source.

Raise table until it is about seven inches below chuck.

Place a piece of scrap wood on table, and lower quill (Figure 6-3) using feed handles.

Rotate spindle to align keyhole in spindle with keyhole in quill.

Insert drift key (E, Figure 6-3) into aligned slots and tap lightly. The chuck and arbor assembly should fall from the spindle.

⚠CAUTION Catch chuck as it is released; allowing it to fall to floor may damage it.

5.4.3 Wrench and key storage

Wrenches, chuck key, and drift key can be stored on fixture on right side of drill press head.

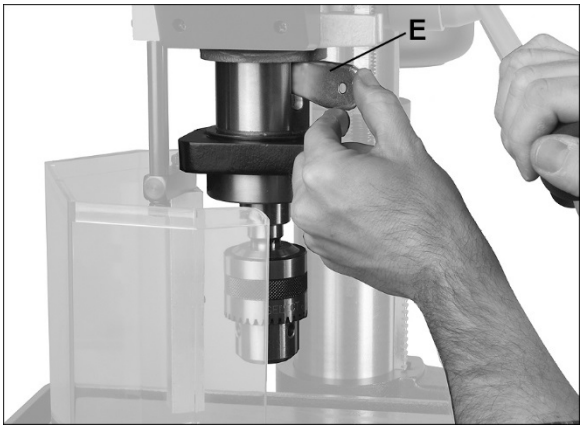

Figure 6-3: drift key insertion

6.0 Electrical connections

WARNING **All electrical connections must be done by a qualified electrician in compliance with all local codes and ordinances. Failure to comply may result in serious injury.**

The IDP-17 and IDP-22 Drill Presses are rated at 400V power, The drill press comes with a plug designed for use on a circuit with a *grounded outlet* .

Before connecting to power source, be sure switch is in *off* position.

6.1 GROUNDING INSTRUCTIONS

This tool must be grounded. In the event of a malfunction or breakdown, grounding provides a path of least resistance for electric current to reduce the risk of electric shock. This tool is equipped with an electric cord having an equipment-grounding conductor and a grounding plug. The plug must be inserted into an appropriate outlet that is properly installed and grounded in accordance with all local codes and ordinances.

WARNING **Improper connection of the equipment-grounding conductor can result in a risk of electric shock. Check with a qualified electrician or service person if you are in doubt as to whether the outlet is properly grounded. Do not modify the plug provided with the tool – if it will not fit the outlet, have a proper outlet installed by a qualified electrician.**

The conductor with insulation having an outer surface that is green with or without yellow stripes is the equipment-grounding conductor. If repair or replacement of the electric cord or plug is necessary, do not connect the equipment-grounding conductor to a live terminal.

Use only 3-wire extension cords that have 3-prong grounding plugs and 3-pole receptacles that accept the tool's plug.

Repair or replace damaged or worn cord immediately.

6.2 Extension cords

The use of extension cords is discouraged; try to position machines near the power source. If an extension cord is necessary, make sure it is in good condition. When using an extension cord, be sure to use one heavy enough to carry the current your product will draw. An undersized cord will cause a drop in line voltage resulting in loss of power and overheating. Table 1 shows correct size to use depending on cord length and nameplate ampere rating. If in doubt, use the next heavier gauge. The smaller the gauge number, the heavier the cord.

Amp Rating		Volts	Total length of cord in feet			
More Than	Not More Than	120 240	25 50	50 100	100 200	150 300
			AWG			
0	6		18	16	16	14
6	10		18	16	14	12
10	12		16	16	14	12
12	16		14	12	Not Recommended	

Table 1: Extension cord recommendations

7.0 Adjustments

7.1 Depth stop adjustment

To drill multiple holes at the same preset depth, use the depth stop:

1. Make a pencil mark on edge of workpiece to indicate depth of hole.

With drill bit in chuck, lower downfeed handle to advance bit to your mark.

With your other hand, advance lock nuts (A, Figure 8-1) on the depth dimension until they are snug to the seat (B).

The drill bit will now advance to this point.

To release, advance nuts counterclockwise to top of depth stop.

Figure 8-1: depth stop adjustment

7.2 **Return spring adjustment**

The return spring is adjusted by the manufacturer and should not require attention. If adjustment is deemed necessary, follow the steps below while referring to Figure 8-3:

1. Unplug machine from power source.
2. Loosen lock nut (E). *Do not remove*.
3. Firmly hold coil spring cover (F).
4. Pull out cover and rotate until pin (G) on housing engages the next notch in coil spring cover. Turn cover clockwise to decrease tension and counterclockwise to increase tension.
5. Tighten lock nut (E). *Do not over-tighten or force nut too strongly against spring cover.*

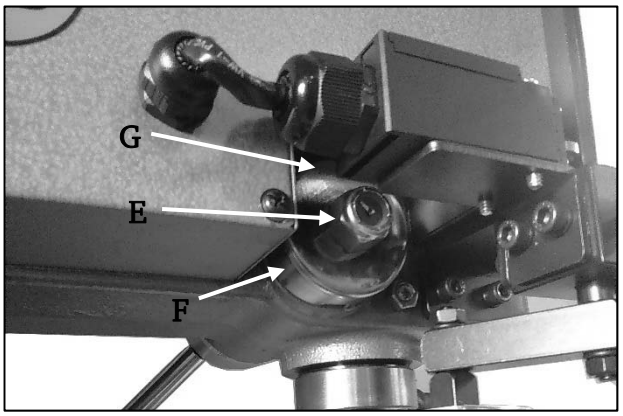

Figure 8-3: return spring adjustment

7.3 **Table tilt adjustment**

Table tilt adjustments are made on table bracket beneath table.

Refer to Figures 8-4 and 8-5.

⚠CAUTION In the following steps do not over-loosen. This could cause table assembly to separate from column, fall and cause injury.

1. **IDP-15BV:** Loosen set screw (H) with 1/4" hex wrench.
2. **IDP-15BV:** Loosen hex cap screw (J) with 5/8" or adjustable wrench.
3. Tilt table to desired angle, referring to scale and pointer atop table bracket.
4. Tighten screw or nuts (J).
5. Tighten set screw (H).

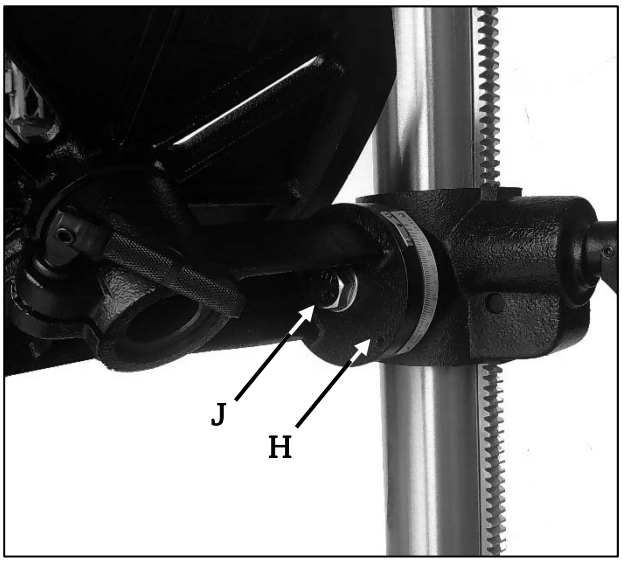

Figure 8-4: table tilt (IDP-17 only)

8.0 **Operating controls**

Press ON button to start spindle rotation. Press OFF to stop.

The work lamp operates independently; on/off button is on top of lamp housing.

9.0 **Operation**

1. Insert drill bit into chuck jaws about 1-inch (25.4mm) deep. When using a small bit, do not insert it so far that the jaws touch the flutes of the bit. Make sure bit is centered in chuck before tightening chuck with key.

For a small workpiece that cannot be clamped to the table, use a drill press vise. The vise must be clamped or bolted to the table. Always use a back-up piece of scrap wood to cover the table. This protects both table and drill bit.

⚠WARNING Workpiece must be clamped to table or secured in a drill press vise that is securely fastened to table. Failure to comply may cause serious injury.

Feed the bit into the material with only enough force to allow the drill bit to work. Feeding too slowly may cause burning of the workpiece. Feeding too quickly may cause the motor to stop and/or the drill bit to break.

Generally speaking, the smaller the drill bit, the greater the RPM required. Soft materials require higher speeds; hard metals slower speeds.

10.0 **User-maintenance**

⚠WARNING Before any intervention on the machine, disconnect it from electrical supply by pulling out plug or turning off main switch at electrical source. Failure to comply may cause serious injury.

A coat of automobile-type wax applied to table and column will help keep surfaces clean.

Check that bolts are tight and electrical cords are in good condition. If an electrical cord is worn, cut, or damaged in any way, have it replaced immediately.

In dusty environments, frequently blow out any dust that accumulates inside the motor fan cover.

Belts should be in good condition with no signs of cracks, frays or deterioration.

10.1 **Lubrication**

All ball bearings are pre-lubricated and sealed, and require no further lubrication.

Periodically apply #2 tube grease to:

- Rack.
- Table elevating mechanism, including worm gear.
- Splines (grooves) in spindle.
- Teeth of quill.

Periodically apply light coat of machine tool oil to quill and column.

The quill return spring should receive SAE 20 oil once yearly. Apply the oil beneath spring cover (F, Figure 8-3) using a squirt can.

11.0 Troubleshooting IDP-15BV

Symptom	Possible Cause	Correction *
Drill press will not start.	Drill press unplugged from wall, or motor.	Check all plug connections.
	Fuse blown, or circuit breaker tripped.	Replace fuse, or reset circuit breaker.
	Cord damaged.	Replace cord.
	Starting capacitor bad.	Replace starting capacitor.
Drill press does not come up to speed.	Extension cord too light or too long.	Replace with adequate size and length cord.
	Low current.	Contact a qualified electrician.
Drill Press vibrates excessively.	Base on uneven surface.	Locate drill press on even floor.
	Bad belt(s).	Replace belts.
Noisy operation.	Incorrect belt tension.	Adjust belt tension.
	Dry spindle.	Lubricate spindle.
	Loose spindle pulley.	Check tightness of retaining nut on pulley, and tighten if necessary.
	Loose motor pulley.	Tighten setscrews in pulleys.
Workpiece burns or smokes.	Incorrect Speed.	Change to appropriate speed.
	Chips not clearing from hole or bit.	Retract drill bit frequently to remove chips.
	Dull drill bit.	Resharpen, or replace drill bit.
	Feeding too slowly.	Increase feed rate.
Drill bit wanders.	Bit sharpened incorrectly.	Resharpen bit correctly.
	Bent drill bit.	Replace drill bit.
	Bit, or chuck not installed properly.	Reinstall the chuck, or bit properly.
Wood splinters on the underside.	No backing board used.	Place a scrap board underneath the workpiece to prevent splintering.
Drill bit binds in workpiece.	Workpiece pinching the bit.	Support or clamp workpiece.
	Excessive feed rate.	Decrease feed rate.
	Chuck jaws not tight.	Tighten chuck jaws.
	Improper belt tension.	Adjust belt tension.
Excessive drill bit runout, or wobble.	Bent drill bit.	Replace drill bit.
	Worn spindle bearings.	Replace spindle bearings.
	Bit, or chuck not properly installed.	Reinstall the bit, or chuck properly.
Quill returns too slow, or too fast.	Improper spring tension.	Adjust spring tension.
Chuck or arbor does not stay in place.	Dirt, grease, etc on arbor, chuck, or spindle.	Clean all mating surfaces thoroughly with a cleaner-degreaser.

* **WARNING:** Some corrections may require a qualified electrician.

Table 2

12.0 **Replacement Parts**

Replacement parts are listed on the following pages. Some parts are shown for reference only, and may not be available individually.

Non-proprietary parts, such as fasteners, can usually be found at local hardware stores, or may be ordered from JET.

12.1.1 IDP-15BV Drill Press – Exploded View

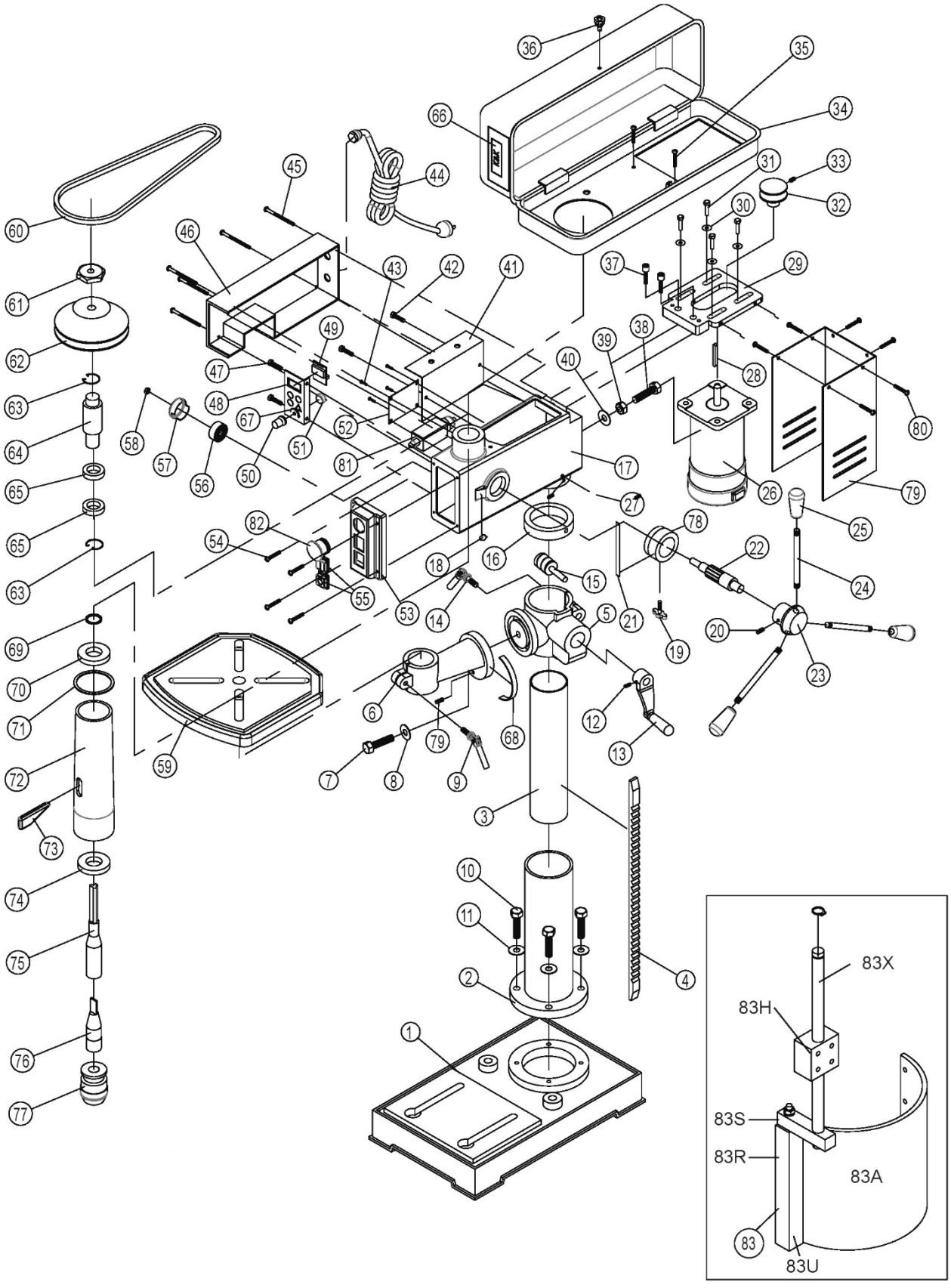

12.1.2 IDP-15BV Drill Press – Parts List

Index No	Part No	Description	Size	Qty
1	PM-212V001	Base Plate	Ø140	1
2-3	PM-212V002	Column Ass'y	Ø73	1
4	PM-212V004	Rack	520 L	1
5	PM-212V005	Column Flange	3 分半	1
6	PM-212V006	Table Arm		1
7	PM-212V007	Screw	5/8 x 1-1/4	1
8	PM-212V008	Washer	5/8 x 30 x 3	1
9	PM-212V009	Vise Handle	3/8 x 26	1
10	PM-212V010	Screw	5/16 x 1	4
11	PM-212V011	Spring Washer	5/16	4
12	PM-212V012	Screw	1/4 x 1/4	1
13	PM-212V013	Lever		1
14	PM-212V014	Vise Handle	1/2 x 45	1
15	PM-212V015	Auger	200	1
16	PM-212V016	Clamping Ring	Ø73	1
17	PM-212V017	Housing		1
18	PM-212V018	Arrow		1
19	PM-212V019	Clamping Screw	5/16 x 18	1
20	PM-212V020	Bolt	4 x 20	1
21	PM-212V021	Scale	80 L	1
22	PM-212V022	Feed Shaft	7/16	1
23	PM-212V023	Handle Flange		1
24	PM-212V024	Handle Rod	3T、4T	3
25	PM-212V025	Handle		3
26	PM-212V026	Motor	2HP	1
	PM-212V026-01	Carbon Brush		2
	PM-212V026-02	Terminal To Carbon Brush		2
27	PM-212V027	Screw	5/16 x 3/8	2
28	PM-212V028	Pen	5 x 25	1
29	PM-212V029	Motor Plate		1
30	PM-212V030	Washer	5/16 x 5 x 5	4
31	PM-212V031	Screw	5/16 x 1-1/4	4
32	PM-212V032	Pulley		1
33	PM-212V033	Screw	6 x 8	1
34	PM-212V034	V-Belt Cover		1
35	PM-212V035	Screw	1/4 x 3/8	4
36	PM-212V036	Screw		1
37	PM-212V037	Screw	5/16 x 1	2
38	PM-212V038	Screw	1/2 x 1	1
39	PM-212V039	Nut	1/2	1
40	PM-212V040	Rubber Foot		1
41	PM-212V041	Plate		1
42	PM-212V042	Screw	3/16 x 3/8	1
43	PM-212V043	Screw	3/16 x 3/8	1
44	200034	Power Cord		1
45	PM-212V045	Screw	3/16 x 60 x 6	4
46	PM-212V046	Cover		1
47	PM-212V047	Screw	3/16x 3/8	2
48	PM-212V048	Plate		1
49	PM-212V049	LED Display		1
50	PM-212V050	Handle		1
51	PM-212V051	Speed Controller		1
52	PM-212V052	Electronique Electronics Plate		1
53	PM-212V053	Switch Box		1
54	PM-212V054	Screw	3/16 x 13	4
55	PM-212V055	Switch Button		2
56+57	PM-212V056K	Spring Ass'y		1
58	PM-212V058	Nut	1/2	1
59	PM-212V059	Table	13N	1

Index No	Part No	Description	Size	Qty
60	PM-212V060	Belt	A37	1
61	PM-212V061	Nut	1"LT	1
62	PM-212V062	Pulley		1
63	PM-212V063	Retaining Ring	Ø45	2
64	PM-212V064	Shaft		1
65	PM-212V065	Ball Bearing	6205	2
66	PM-212V066	Plate		1
67	PM-212V067	Plate		1
68	PM-212V068	Scale		1
69	PM-212V069	Retaining Ring	Ø9	1
70	PM-212V070	Ball Bearing	6201	1
71	PM-212V071	Rubber Washer	Ø40	1
63-75	PM-212V072K	Spindle Ass'y		1
73	944477	Wedge		1
74	PM-212V074	Ball Bearing	6204	1
76	100188	Taper Mandrel	MK2/B18	1
77	9473	SS Chuck	1-13mm	1
78	PM-212V078	Flange		1
79	PM-212V079	Cover		1
80	PM-212V080	Screw	3/16 x 3/8	6
81	PM-212V081	Micro Switch		1
82	PM-212V082	Emergency Stop		1
83	PM-212V083	Chip Guard Ass'y		1
83A	PM-212V083A	Glass		1
83H	PM-212V083H	Holder		1
83R	PM-212V083R	Rod Square		1
83S	PM-212V083S	Retaining Ring		1
83U	PM-212V083U	Bracket		1
83X	PM-212V083X	Round Rod		1

13.0 **Electrical Connections for IDP-15BV**

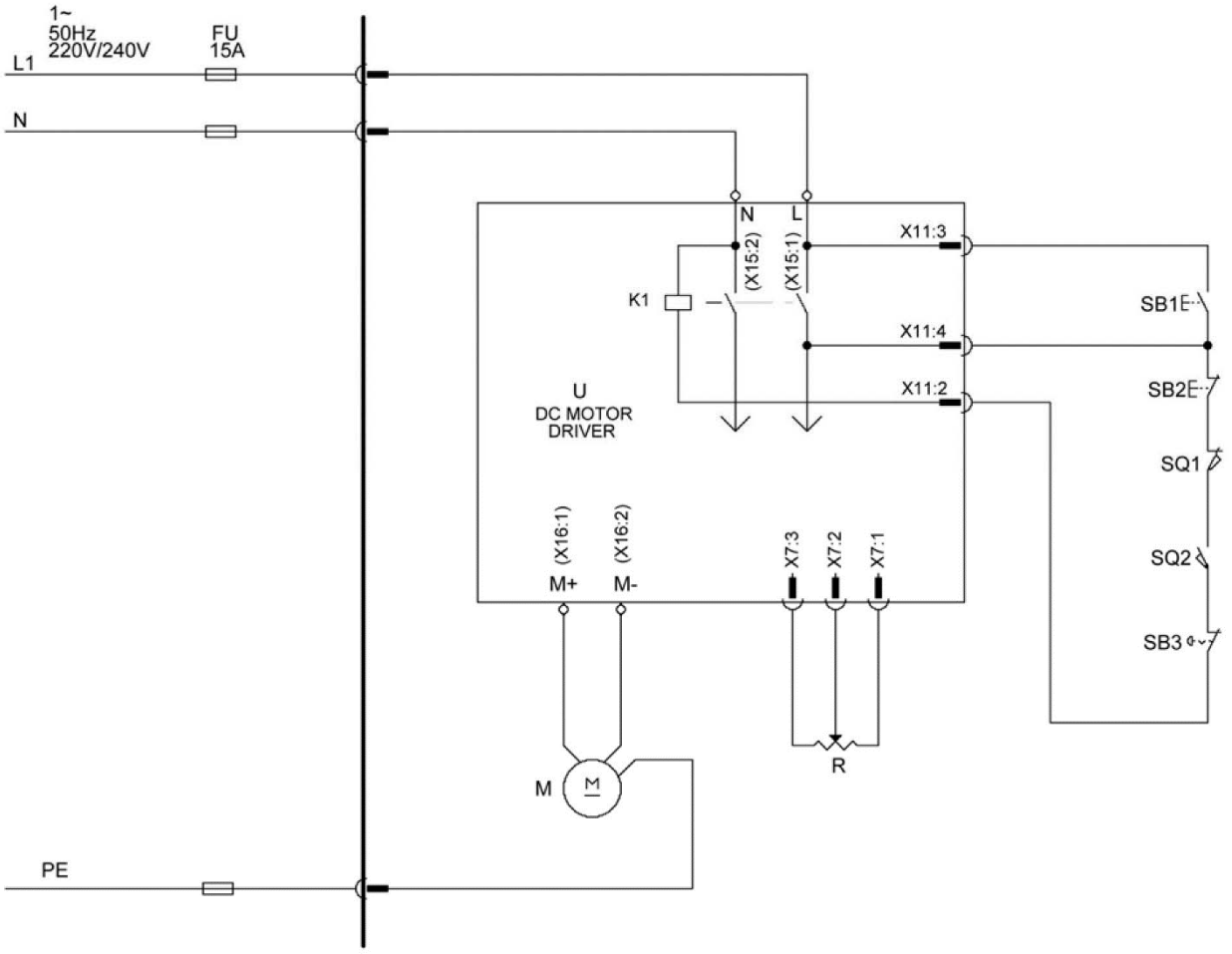

Item designation	Description & function	Maker	Type	Technical data	Making of conformity granted
XP	Plug for supply Three phase	LIAN DUNG	LT-32	10~16A , 250V	
	Supply cable single phase	TIEN TUNG	H05VV-F	3G 1.5mm^2 300/500V	VDE 0620
SB1	Start switch	KM		240V/10A	
SB2	OFF (Emergency-Stop) Switch	KM		240V/10A	
SB3	Emergency-Stop switch	XINQUANG	KB2-BE102	10A	
SQ1	Micro switch	Zhejiang Tiande	CT-103	250V/10A	
SQ2	Micro switch	HIEHLY	CLS-103	220V/10A	