JMD-45L

MILLING AND DRILLING MACHINE

Original:

GB
Operating Instructions

JPW (Tool) AG
Ackerstrasse 45
CH-8610 Uster
Switzerland

www.jettools.com

T – 50000856T 2019-08

CE-Conformity Declaration
CE-Konformitätserklärung
Déclaration de Conformité CE

Product / Produkt / Produit:
Milling/Drilling Machine
Bohr-Fräsmaschine
Perceuse fraiseuse

JMD-45L

Brand / Marke / Marque:

JET

Manufacturer / Hersteller / Fabricant:
JPW (Tool) AG, Ackerstrasse 45, CH-8610 Uster
Schweiz / Suisse / Switzerland

We hereby declare that this product complies with the regulations
Wir erklären hiermit, dass dieses Produkt der folgenden Richtlinie entspricht
Par la présente, nous déclarons que ce produit correspond aux directives suivantes

2006/42/EC
Machinery Directive
Maschinenrichtlinie
Directive Machines

2014/30/EU
electromagnetic compatibility
elektromagnetische Verträglichkeit
compatibilité électromagnétique

designed in consideration of the standards
und entspechendr folgender zusätzlicher Normen entwickelt wurde
et été développé dans le respect des normes complémentaires suivantes
EN ISO 12100:2010
EN 60204-1:2006+AC:2010
EN 13128:2001+A2:2009/AC:2010
EN 61000-6-4:2007+A1:2011
EN 61000-6-2:2005

Responsible for the Documentation / Dokumentations-Verantwortung / Résponsabilité de Documentation:
Head Product-Mgmt. / Leiter Produkt-Mgmt. / Resp. Gestion des Produits
JPW (Tool) AG

2018-11-20 Christophe SAINT SULPICE, General Manage

JPW (Tool) AG, Ackerstrasse 45, CH-8610 Uster
Schweiz / Suisse / Switzerland

In addition to the safety requirements contained in these operating instructions and your country's applicable regulations, you should observe the generally recognized technical rules concerning the operation of metal machines. Any other use exceeds authorization.
In the event of unauthorized use of the machine, the manufacturer renounces all liability and the responsibility is transferred exclusively to the operator.

General safety notes
Read and understand the entire instruction manual before attempting assembly or operation.

Keep this operating instruction close by the machine, protected from dirt and humidity, and pass it over to the new owner if you part with the tool.
No changes to the machine may be made.
Daily inspect the function and existence of the safety appliances before you start the machine.
Do not attempt operation in this case, protect the machine by unplugging the power cord.
Before operating the machine, remove tie, rings, watches, other jewellery, and roll up sleeves above the elbows.
Remove all loose clothing and confine long hair.
Wear safety shoes; never wear leisure shoes or sandals.
Always wear the approved working outfit:
- safety goggles
- ear protection


Do not wear gloves while operating this machine.

Install the machine so that there is sufficient space for safe operation and workpiece handling.
Keep work area well lighted.
The machine is designed to operate in closed rooms and must be bolted stable on firm and levelled table surface or on the supplied cabinet stand.
Make sure that the power cord does not impede work and cause people to trip.
Keep the floor around the machine clean and free of scrap material, oil and grease.
Stay alert!
Give your work undivided attention.
Use common sense. Do not operate the machine when you are tired.
Keep an ergonomic body position. Maintain a balanced stance at all times.

Do not operate the machine under the influence of drugs, alcohol or any medication. Be aware that medication can change your behaviour.

Never reach into the machine while it is operating or running down.

Keep children and visitors a safe distance from the work area.
Never leave a running machine unattended. Before you leave the workplace switch off the machine.
Do not operate the electric tool near inflammable liquids or gases.
Observe the fire fighting and fire alert options, for example the fire extinguisher operation and place.
Do not use the machine in a dump environment and do not expose it to rain.
Before machining, remove any nails and other foreign bodies from the workpiece.
Work only with well sharpened tools.
Machine only stock which rests securely on the table. Always close the chuck cover before you start the machine.
Specifications regarding the maximum or minimum size of the workpiece must be observed.
Do not remove chips and workpiece parts until the machine is at a standstill.
Do not stand on the machine.
Connection and repair work on the electrical installation may be carried out by a qualified electrician only.

Have a damaged or worn power cord replaced immediately.
Make all machine adjustments or maintenance with the machine unplugged from the power source.

Do not over extrude material from the back of spindle bore while machine running.

WARNING:FAILURE TO FOLLOW THESE RULES
MAY RESULT IN SERIOUS PERSONAL INJURY

As with all machinery there are certain hazards involved with operation and use of the machine. Using the machine with respect and caution will considerably lessen the possibility of personal injury. However, if normal safety precautions are overlooked or ignored, personal injury to the operator may result.

This machine was designed for certain applications only. We strongly recommends that this machine. NOT be modified and/or used for any application other than for which it was designed. If you have any questions relative to its application DO NOT use the machine until you have had detail instruction form your dealer.

SAFTEY RULES FOR ALL TOOLS

1.FOR YOUR OWN SAFETY , READ THIS INSTRUCTION MANUAL BEFORE OPERATING THE TOOL. Learn the tool's application and limitations as well as the specific hazards peculiar to it.

2.KEEP GUARDS IN PLACE and in working order.

3.GROUND ALL TOOLS. If tool is equipped with three-prong plug, it should be plugged into a three-hole electrical receptacle. If an adapter is used to accommodate a two-prong plug receptacle, the adapter lug must be attached to a know ground . Never remove the thrid prong.

4.REMOVE ADJUSTING AND WRENCHES.

Form habit of checking to see that keys and adjusting wrenched are removed form tool before turning it "on."

5.KEEP WORK AREA CLEAN. Cluttered areas and benches invite accidents.

6.DON'T USE IN DANGEROUS ENVIRONMENT. Don't use power tools in damp or wet locations, or expose them to rain. Keep work area well-lighted.

7.KEEP CHILDER AND VISITORS AWAY. All children and visitors should be keep a safe distance form work area.

8.MAKE WORKSHOP CHILDROOF-with padlocks, master switches, or by removing starter keys.

9.Don't force tool. It will do the job better and be safer at the rate for which it was designed.

10.USE RIGHT TOOL. Don't force tool or attachment to do a job for which it was not designed.

11.WEAR PROPER APPAREL. No loose clothing , gloves , neckties , rings ,

bracelets, or other jewelry to get caught in moving parts. Nonslip foot wear is recommended . Wear protective hair covering to contain long hair.

12.ALWAYS WEAR EYE PROTECTION. Refer to ANSIZ87.1 Standard for appropriate recommendations . Also use face or dust mask if cutting operation is dusty.

13.SECURE WORK. Use clamps or a vise to hold work when practical. It's safer than using your hand and frees both hands to operate tool.

14.DON'T OVERREACH. Keep proper footing and balance at all times.

15.MAINTAIN TOOLS IN TOP CONDITION.

Keep tool sharp and clean for best and safest performance. Follow instructions for lubricating and changing accessories.

16.DISCONNECT TOOLS before servicing and when changing accessories such as blades,bits cutters,etc.

17.USE RECOMMENDED ACCESSORIES.

Consult the owner's manual for recommended accessories. The use of improper accessories may cause hazards.

18.AVOID ACCIDENTAL STARTING. Make sure switch is in "OFF" postion before plugging in power cord.

19.NEVER STAND ON TOOL. Serious injury could occur if the tool is tipped or if the cutting tool is accidentally contacted.

20.CHECK DAMAGED PARTS. Before further use of the tool, a guard or other part that is damaged should be carefully checked to ensure that it will operate properly and perform its intended function check for alignment of moving parts binding of moving parts,breakage of parts mounting , and any other conditions that may affect its operation.A guard or other part that is damaged should be properly repaired or replaced.

21.DIRECTION OF FEED. Feed work into a blade or cutter against the direction of rotation of the blade or cutter only.

22.NEVER LEAVE TOOL RUNNING UNATTENDED.TURN POWER OFF. Don't leave tool until it comes to a complete stop.

23.DRUGS ALCOHOL, MEDICATION. Do not operate tool while under the influence of drug,alcohol or any medication.

24.MAKE SURE TOOL IS DISCONNECTED FORM POWER SUPPLY while motor is being mounted, connected or reconnected.

ADDITIONAL SAFETY RULES FOR MILL DRILL

1. **BE SURE drill bit or cutting tool is securely locked in the chuck.**
2. **BE SURE chuck key is remove form the chuck before turning on power .**
3. **Adjust the table or depth stop to avoid drilling into the table.**
4. **SHUT OFF the power , remove the drill bit or cutting tool, and clean the table before leaving the machine.**
5. **CAUTION. When practical, use clamps or a vise to secure workpiece to keep the workpiece form rotating while the drill bit or cutting tool.**
6. **WARNING: FOR Your Own Safety Don't wear gloves when operating a mill/drill.**

SPECIFICATION

Model		JMD-45L	
Drilling capacity	cast iron	45mm	
	mild steel	32mm	
Face mill capacity		80mm	
End mill capacity		32mm	
Working table size		1000mm×240mm	
Working table cross travel		190mm	
Working table longitudinal travel		560mm	
T-slot size		14mm	
Head tilt left right		90º	
Head swivel			
Spindle taper(option)		ISO30	
Max distance spindle to table		450mm	
Spindle stroke		120mm	
Spindle speed(rpm) (option)	Motor 1.1KW/1.5KW	I	75 180 280 600 1000 1600
		II	150 360 560 1200 2000 3200
	Motor 1.5KW	50HZ	75 170 280 540 960 1600
		60HZ	90 210 345 670 1180 1970
Packing dimension		1220mm×760mm×1150mm	
NW/GW Weight		350/380Kg	

WARNING: CHANGE SPEED ONLY WHEN MACHINE IS STOPPED

CHANGING THE GEAR BOX OIL

Tilt the head stock over as shown in Fig 1. Open the drain plug to allow the oil to drain form the opening completely. Then lock the oil drain plug and turn the head to be upright position. Remove the oil filler plug fill the oil to the gear until the oil lever reach the middle of oil fluid lever indicator. Then lock the plug.

CLEANNING

(1) Your machine has been coated with a heavy grease to protect it in shipping. This coating should be completely removed before operating the machine. Commercial degreaser , kerosene or similar solvent may be used to remove the grease form the machine, but avoid getting solvent ob belts or other rubber parts.

(2) After cleaning , coat all bright work with a light lubrication. Lubricate all points with a medium consistency machine oil.

LUBRICATION:

All ball bearings in your mill/drill are sealed for lift,requiring no lubrication.

Points requiring lubrication are:

(1) Internal spline drive assembly. Keep this area well lubricated with a good grade grease, insert grease in the hole at the top of spindle pulley spline driver, lube twice yearly.

(2) A light film of oil applied to the quill and column will reduce wear,prevent rust, and assure ease of operation.

(3) Quill return spring should receive oil (sae 20) once yearly. Remove cover plate and apply oil with squirt can or small brush.

(4) IMPORTANT:The gear box should be oiled with a lubricant such as sae 68 oil in level. CHANGE OIL EVERY ONE YEAR.

(5) Apply lubriplate to quill pinion every 90 days.

NOTE: use extreme care when performing this operation and keep hands clear of pinch points. When using paraffin bar , do this only by turning the sheaves by hand. Do not apply with motor running.

USE OF MAIN MACHINE PARTS

(1) To raise and lower the head by head handle.

(2) Equipped with an electric switch for tapping operation clockwise or counterclock wise.

(3) To adjust the quick or slow feeding by feed handle.

(4) To adjust the table left and right travel by table handle wheel.

(5) To adjust the table fore and after travel by table handle wheel.

(6) To operate the spindle handle wheel for micro feed.

(7) To adjust the scale size according to working need.

PRECAUTION OPERATION

Check all parts for proper condition before operation ; if normal safety precautions are nnoticed carefully, this machine can provide you withstanding of accurate service.

(1) Before Operation

(a) Fill the lubricant

(b) In order to keep the accurate precision, the table must be free form dust and oil deposites.

(c) Check to see that the tools are correctly set and the workpiece is set firmly.

(d) Be sure the speed is not set to fast.

(e) Be sure everthing is ready before use

(2) After Operation

(a) Turn off the electric switch.

(b) Turn down the tools.

(c) Clean the machine and coat it with lubricant.

(d) Cover the machine with cloth to keep out the dust.

(3) Adjustment of head

(a) To raise and lower the head,loosen the leaf screw located on the right side of the raise and lower base.When the desired height is reached tighten leaf screw to avoid vibration.

(b) Unscrew 3 nuts while the workpiece needs to be bevel turn to the degrees you wish on the scale,then screw the 3.

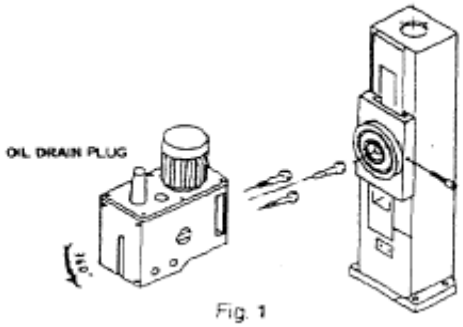

Fig. 1

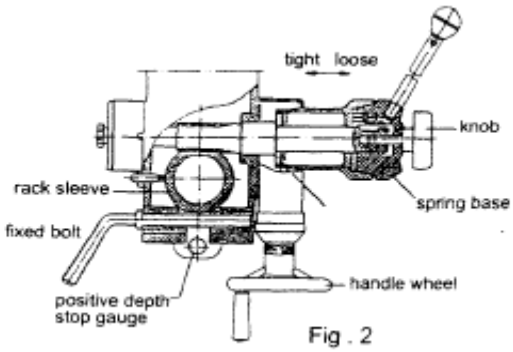

Fig . 2

QUILL RETURN SPRING ADJUSTMENT:

Spring tension for return of spindle , after hole drilling,has been pre-set at the factory.No futher adjustment should be attempted unless absolutely necessary. Adjustment will probably br required if a multiple spindle drilling or tapping head is used.If adjustment is necessary , loosen lock screw while holding quill spring housing. Do not allow the housing to turn in your hand , or spring will unwind.Turn entire housing assembly clockwise the number of turns necessary to cause the quill to return to its uo position.(NOTE:The flat

of the spring housing pilot is lined up with the spring loading hole on the body of the spring housing.) Reset lockscrew make sure point of screw mates the flat on the housing journal.

(1) Preparing for Drilling (see fig.2)(Except addition power feed system).

Turn of the knob make loose the taper body of worm gear and spring base. Then we decide spindle stroke setting the positive depth stop gauge for drilling blind hole or free state for pass hole.

(2) Preparing for milling(see fig.2)(Except addition power feed system)

(a) Adjust the positive depth stop gauge to highest point position.

(b) Turn tight of the knob be use to taper friction force coupling the worm gear and spring base. Then turning the handle wheel by micro set the spindle of work piece machining height.

(c) Lock the rack sleeve at the desired height with fixed bolt.

ADJUSTING TABLE SLACK AND COMPENSATE FOR WEAR(see fig.3)

(1) Your machine is equipped with jib strip adjustment to compensate for wear and excess slack on cross and longitudinal travel.

(2) Clockwise rotation the job strip bolt with a big screw for excess slack otherwise a little counter cloclwise if too tight.

(3) Adjust the jib strip bolt until feel a slight drag when shifting the table.

CLAMPING TABLE BASE AND MACHINE BASE (See Fig.3)

(1)When milling longitudinal feed. It is advisable to lock the cross feed table travel to insure the accuracy of your work. To do this , tighten the small leaf

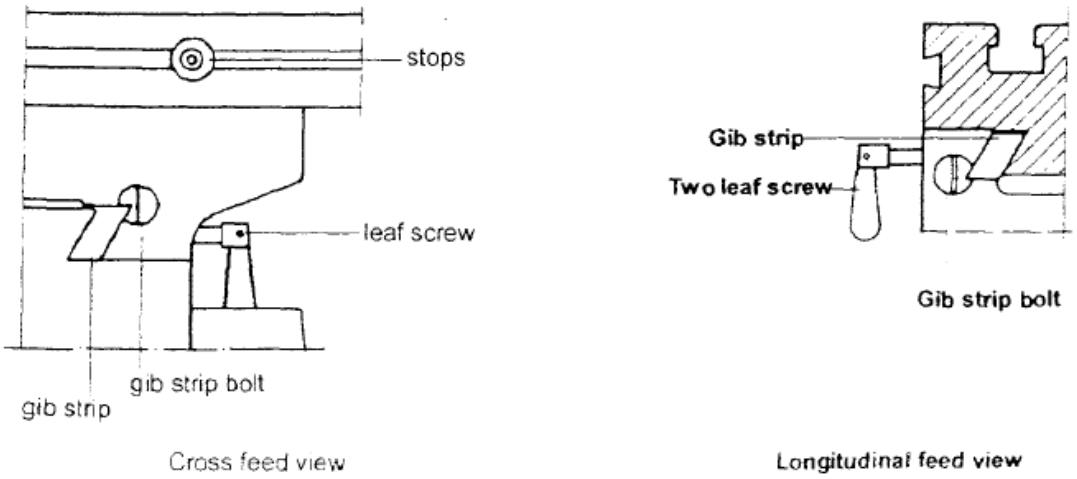

Fig.3

(2) To tighten the longitudinal feed travel of the table for cross feed milling,tighten the two small leaf screw on the front of the table base.

(3) Adjustable travel stops are provide on the front of the table for control of cross travel and the desired milling length.

TO CHANGE TOOLS

(1) Removing Face Mill or Drill Chuck Arbor

Loosen the arbor bolt at the top of the spindle shaft approximately 2 turns with a wrench.Rpa the top of the arbor bolt with a mallet.

After taper has been broken loose,holding chuck arbor on hand and turn detach the arbor bolt with the other hand.

(2) To install Face Mill or Cutter Arbor

Insert cutter and cutter arbor bolt detach securely, but do not over-tighten.

(3) Removing Taper Drills

(a)Turn down the arbor bolt and insert the taper drill into the spindle shaft.

(b)Turn the rapid down handle rod down until the oblong hole in the rack sleeve appears.Line up this hole with the hole in the spindle.Insert key punch key through holes and strike lightly with a mallet. This will force the taper drill out.

SPECIFICATION OF T-SLOT

The size of T-Solt on table as fig.4

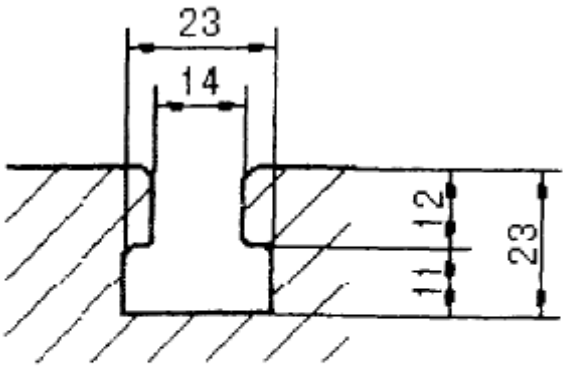

Fig.4

TROUBLE SHOOTING HINTS

TROUBLE	PROBABLE CAUSE	REMEDY
Excessive Vibration	1.Motor out of balance 2.Bad motor	1.Balance or replace problem motor. 2.Replace motor
Motor stalls	1.Over feeding. 2.Dull drill. 3.Motor not building up to running speed. 4.Bad motor	1.Replace feed rate. 2.Sharpen drill and keep sharp. 3.Replace or repair motor .Check fuses in all three legs on three phase motors and replace if necessary. 4.Replace motor
Noisy Operation	1.Excessive vibration 2.Improper quill adjustment. 3.Nosiy spline. 4.Noisy motor	1.Check remedy under excessive vibration. 2.Adjust quill. 3.Lubricate spline. 4.Check motor bearing or for loose motor fan.
Drill or Tool heats up or burns work	1.Excessive speed. 2.Chips not clearing. 3.Dull tool. 4.Feed reate too slow. 5.Rotation of drill incorrect. 6.Failure to use cutting oil or coolant (on steel)	1.Readuce speed. 2.Use pecking operation to clear chips. 3.Sharpen tool or replace. 4.Increase feed enough to clear chips. 5.Reverse motor rotation. 6.Use cutting oil or coolant on steel
Drill leads off	1.No drill spot. 2.Cutting lips on drill off center. 3.Quill loose in head. 4.Bearing play.	1.Center punch or center drill workpiece. 2.Regrind drill. 3.Tighten quill. 4.Check bearings and reseat or replace if necessary.
Excessive drill runout or wobble	1.Bent drill. 2.Bearing play. 3.Drill not seated properly in chucks.	1.Replace drill.Do not attempt to straighten. 2.Replace or reseat bearings. 3.Loosen , reseat and tighten chuck.
Work or fixture comes loose or spins	1.Failure to clamp workpiece or work holding device to table.	1.Clamp workpiece or work holding device to table surface.

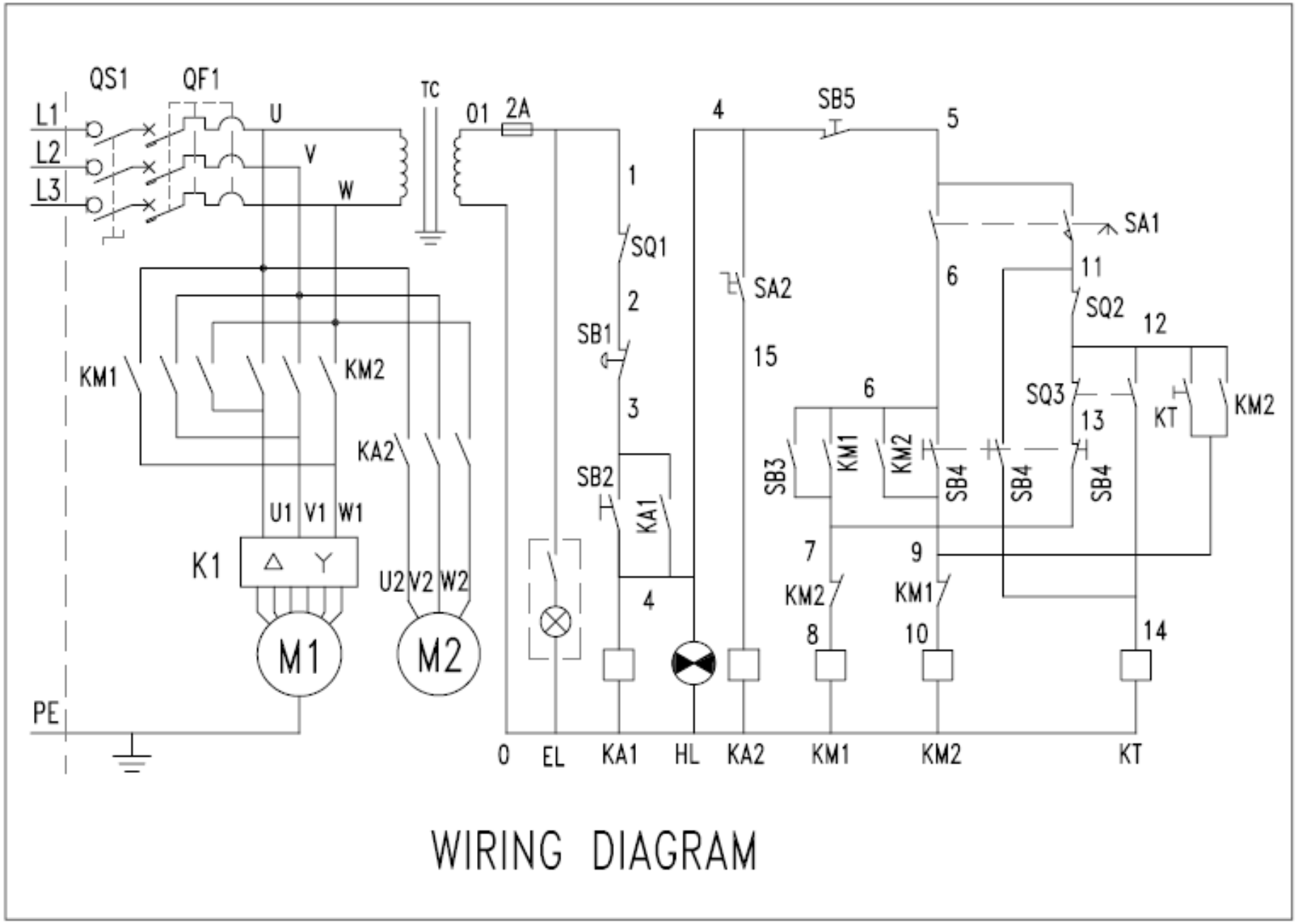

WIRING DIAGRAM

JMD-45L				
NO	Electrical code	Model and Specification	Function description	Supplier
1	QS1	JCH13-20 20/41000	Change-over switch	JUCHE
2	TC	JBK5-63VA	Transformer	AOHENG
3	FU	2A	FUSE	ZHENGRONG
4	QF1	JCM6-25	Circuit breaker	JUCHE
5	SB1	LA125H-BS542	Emergency stop button	MINGER
6	SB2	LA125J-11D/206A	Start button	MINGER
7	HL	Green Indicator light	Power on	MINGER
8	SB3	LA125H-BA31	Forward	MINGER
9	SB4	LA125H-BA31	Reverse	MINGER
10	SB5	LA125H-BA42	stop button	MINGER
11	SA1	LA125H-BD33	Drilling milling /Tapping	MINGER
12	SA2	LA125H-BD21	Cooling pump button	MINGER
13	SQ1	KW-7	Spindle protect	LEMA
14	SQ2	KW3-0Z	Tapping limit switch	BINGSHUANG
15	SQ3	KW3-0Z	Tapping limit switch	BINGSHUANG
16	KM1	3TB41	Contactor	SIEMENS
17	KM2	3TB41	Contactor	SIEMENS
18	KA1	HH52P-L	Auxiliary relay	E&E
19	KA2	HH54P-L	Auxiliary relay	E&E
20	KT	H3Y-2	Time relay	OMRON
21	EL	JC35A	Halogen working lamp	JINYE
22	K1	LW28-20/4	Double Speed	JUCHE
23	M1	YD90L-4/2	MOTOR	DONGTAI
24	M2	DB-12	Cooling pump	DONGTAI

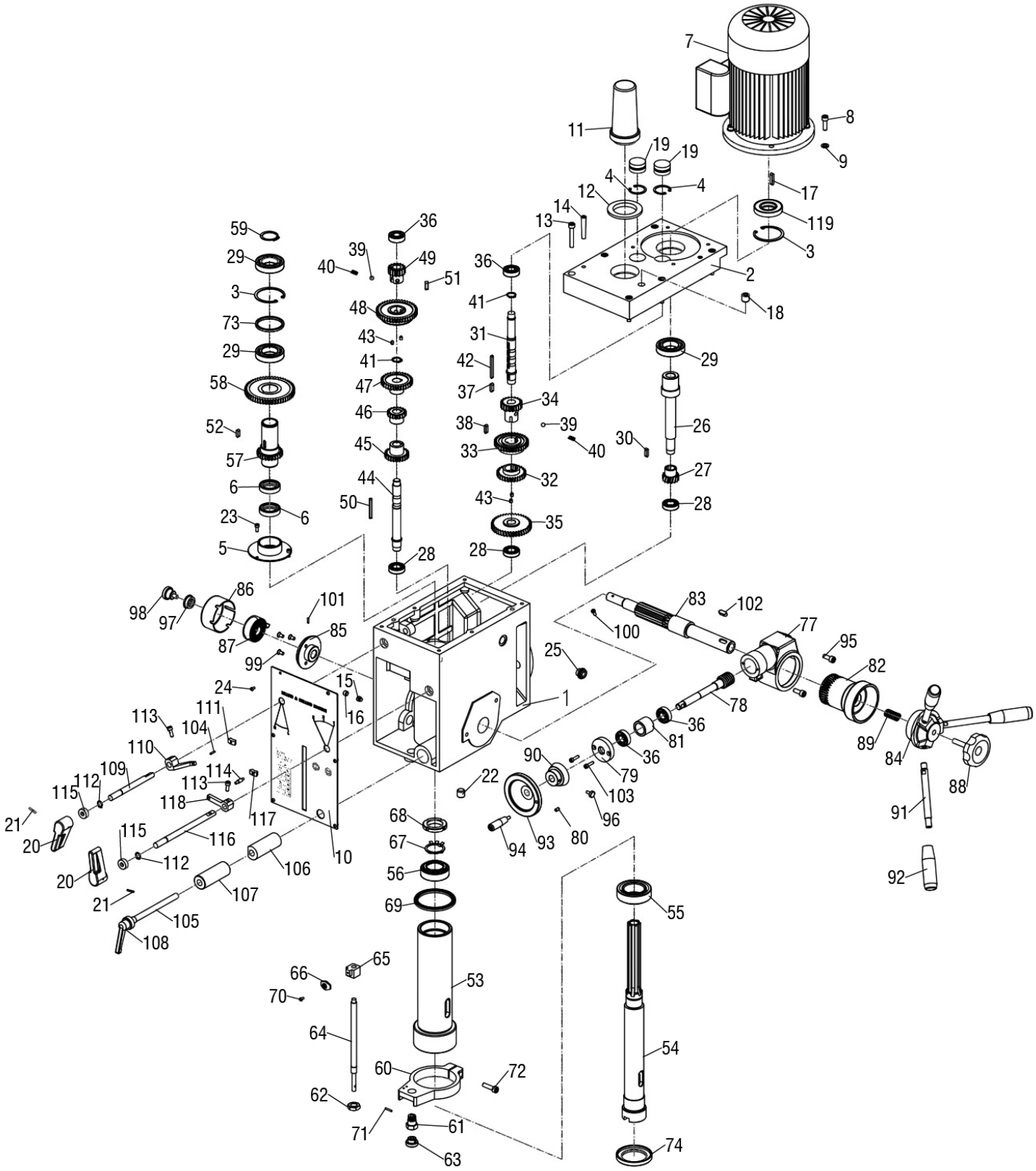
7
8
9
11
19
19
4
4
12
17
14
13
119
3
2
18
59
29
3
73
29
58
52
57
6
6
23
5
36
39
40
49
51
48
43
41
47
46
45
44
50
28
36
41
31
42
37
34
38
39
40
33
32
43
35
28
29
26
30
27
28
86
98
97
101
87
85
99
24
15
16
113
111
104
110
109
112
115
113
114
118
117
21
20
115
116
112
20
21
105
108
106
107
10
68
67
56
69
65
66
70
64
60
62
71
61
63
53
54
55
74
72
83
102
100
77
95
25
82
1
78
36
81
36
89
84
88
90
79
22
103
96
93
80
94
91
92

Head parts for spindle power feed

No	Qty.	Code	Name	No	Qty.	Code	Name
1	1	20010B	head body	37	1	6X14	key
2	1	20011B	head body cover	38	1	6X28	key
3	2	φ62	Int retaining ring	39	2	φ8	ball
4	2	φ35	Int retaining ring	40	2		spring
5	1	20018B	airtight base	41	2	φ18	Ext retaining ring
6	2	45×35X10	airtight ring	42	1	5X50	key
7	1	1.5KW	motor	43	4	M6X12	screw
8	1	M8X25	screw	44	1	20107B	III shaft
9	1	8	washer	45	1	20109-B	Gear Z25
10	1	20201	plate	46	1	20110-2-B	Gear Z18
11	1	20304-1B	arbor bolt cover	47	1	20112-B	Gear Z32
12	1	20304-2B	arbor bolt cover base	48	1	20113-B	Gear Z43
13	6	M8X45	screw	49	1	20115-B	Gear Z16
14	2	8×40	pin	50	1	5X50	key
15	1	M10×10	screw	51	1	6X18	key
16	1	M10×8	screw	52	1	6X18	key
17	1	6X28	key	53	1	20019	spindle sleeve
18	1	ZG3/8”	bolt	54	1	20104B	spindle
19	2	20020B	cap	55	1	30207 /P5	bearing
20	2	20307B	speed lever	56	1	30206 /P5	bearing
21	2	3X18	pin	57	1	20114-B	splined sleeve Z25
22	1	ZG3/8”	oil plug	58	1	20116-B	Gear Z53
23	3	M5x10	screw	59	1	φ35	Ext retaining ring
24	6	M4X8	screw	60	1	20012	feed base
25	1	M18X1.5	oil pointer	61	1	20128	support base
26	1	20105B	I shaft	62	1	20129	nut
27	1	20105-1-B	Gear Z14	63	1	20130	knob
28	3	6003 / P5	bearing	64	1	20131	graduated rod
29	3	6007 / P5	bearing	65	1	20021	fixed bolt
30	1	5X25	key	66	1	20132	scale board
31	1	20106B	II shaft	67	1	φ30	lock washer
32	1	20108-B	Gear Z29	68	1	M30X1.5	lock nut
33	1	20110-1-B	Gear Z35	69	1	20308	rubber washer
34	1	20111-B	Gear Z21	70	1	M4X8	screw
35	1	20106-1-B	Gear Z41	71	1	3X18	split pin
36	4	6202 / P5	bearing	72	1	M8X30	bolt

No	Qty.	Code	Name
73	1	20024B	separating ring
74	1	20133B	Bearing cover
75	1	M5X6	Screw (R8)
76	1	M5X4	Pin (R8)
77	1	20015	worm wheel box
78	1	20119	worm shaft
79	1	20302	worm cover
80	1	M6X12	screw
81	1	20120	separating ring
82	1	20016	worm wheel
83	1	20117	pinion shaft
84	1	20013	handle body
85	1	20118	spring base
86	1	20123	spring cap
87	1	20122	spring plate
88	1	20303	big ripple handle
89	1		compression spring
90	1	20017	graduated plate
91	1	20121B	handle rod
92	1	20301B	handle ball
93	1	20306B	handle wheel
94	1	20305-B	handle rod
95	2	M8X25	screw
96	1	10107	screw
97	1	203063	washer
98	1	203066	screw
99	3	M6X12	screw
100	1	M5X12	screw
101	2	3X12	pin
102	1	8X20	key
103	2	M5X20	screw
104	1	3X15	pin
105	1	20124B	fixed bolt
106	1	20203B	fixed tight block
107	1	20202B	fixed tight block

No	Qty.	Code	Name
108	1		adjust handle
109	1	20125B	lever shaft
110	1	20022-1B	lever
111	1	20204-2B	lever bracket
112	2	12	Ext retaining ring
113	2	M6X16	screw
114	1	20204-3B	lever rod
115	2	12X22X8	oil seal
116	1	20126B	long lever shaft
117	1	20204-1B	lever bracket
118	1	20022-2B	lever
119	1	35x62x10	oil seal

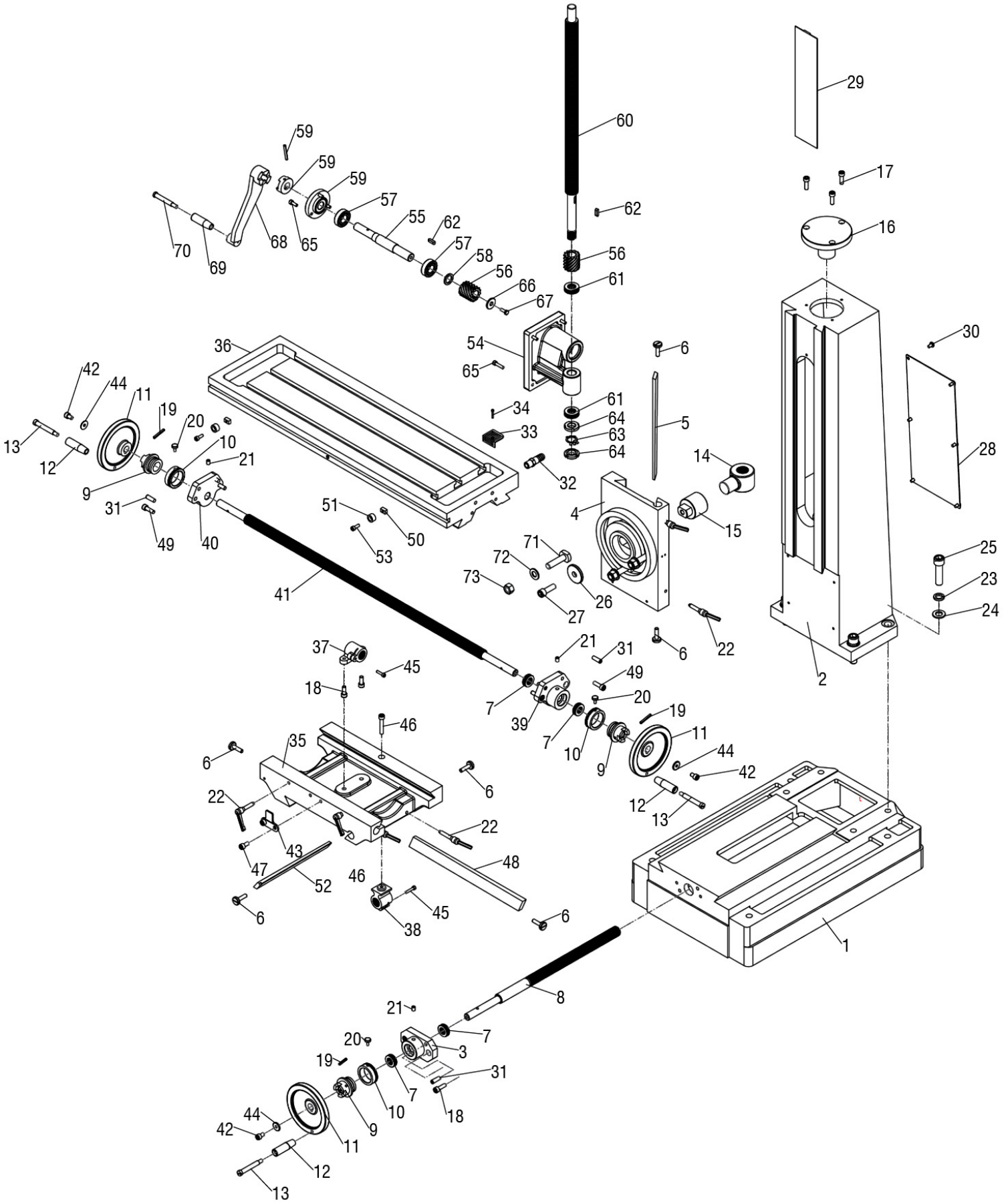
29
60
59
59
59
57
55
62
62
57
58
56
56
61
66
67
17
16
70
69
68
65
30
36
54
6
65
42
44
11
19
20
10
21
13
12
9
31
49
40
34
33
61
64
63
64
5
14
28
32
4
15
51
50
53
71
72
73
26
27
41
25
23
24
22
6
21
31
37
45
49
18
20
7
39
19
46
35
7
10
9
11
44
42
6
6
22
12
13
22
43
47
52
48
46
45
38
6
6
1
2
8
21
7
20
3
19
31
7
10
18
44
42
9
11
12
13

BASE PARTS

No	Qty.	Code	Name	No	Qty	Code	Name
1	1	10010	base	42	3	M6x16	screw
2	1	10013	column	43	1	10105	Dial clutch
3	1	10021	square flange	44	3	6	washer
4	1	10016	raise and lower base	45	2	M5X20	screw
5	1	10025	gib strip	46	1	M8X45	screw
6	6	10106	screw	47	2	M8X15	screw
7	4	51103	bearing	48	1	10022	gib strip
8	1	10104	table screw	49	4	M8X25	screw
9	3	10102	dial clutch	50	2	10108	movable fixed block
10	3	10111	graduated plate	51	2	10109	fixed block support
11	3	10301	wheel	52	1	10023	gib strip
12	3	20305-1B	turn handle	53	2	M6 X 16	screw
13	3	20305-1B	screw	54	1	10017	raise and lower base
14	1	10024	nut	55	1	10113	shaft
15	1	10117	nut bracket	56	2	20109	gear
16	1	10014	cover	57	2	6004	bearing
17	3	M8x20	screw	58	1	100218	washer
18	4	M8X25	screw	59	1	10015	flange
19	3	5X35	pin	60	1	10016	raise and lower screw
20	2	10107	screw	61	2	51104	bearing
21	5	8	oil cup	62	2	6 X 20	key
22	6	M8	fixed handle	63	1	20	lock washer
23	4	16	washer	64	2	M20X1.5	lock nut
24	4	16	washer	65	7	M6 X 20	screw
25	4	M16X60	bolt	66	1	20109.1	washer
26	1	10120	washer	67	1	M8x16	screw
27	1	M12X35	screw	68	1	10018	handle
28	1	10119	plate	69	1	10018.1	turn handle
29	1	10124	protecting cover	70	1	10018.2	screw
30	6	M6X12	screw	71	3	M14x55	bolt
31	6	8X30	pin	72	3	14	washer
32	1		Pipe joint	73	3	M14	nut
33	1		filter screen				
34	2	M3x25	screw				
35	1	10011	center base				
36	1	10012	table				
37	1	10202	table nut				
38	1	10203	table base nut				
39	1	10020	right flange				
40	1	10019	left flange				
41	1	10103	table screw				

Certificate of Inspection

for

Geared Head Milling and Drilling Machine

Model JMD-45L

Dispatch No.:

The machine has been qualified and may be permitted to dispatch

Head of Inspection Depart_____ Date_____

Director_____ Date_____

ACCURACY TEST FOR MILLING & DRILLING MACHINE		Total 2	
		P1	
No.	Checking items	Tolerance	Error tested
G1	**The flatness of worktable surface** 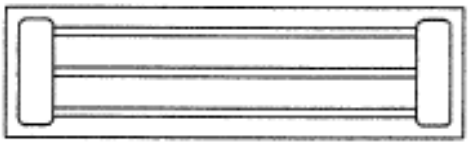	**0.025 for any tesred length 200 Max 0.08**	
G2	**Squareness of worktable longitudinal movement to cross movement** 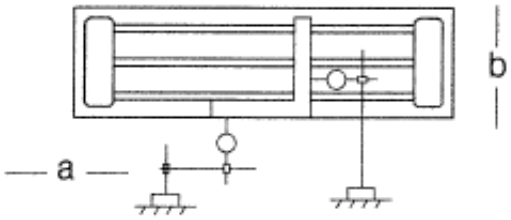	0.04/300	
G3	**Parallelism of worktable longitudinal movement to the base T-slot** 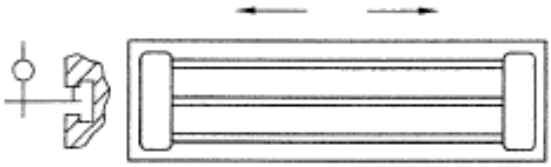	0.05	
G4	**Ran-out of spindle hole center line** 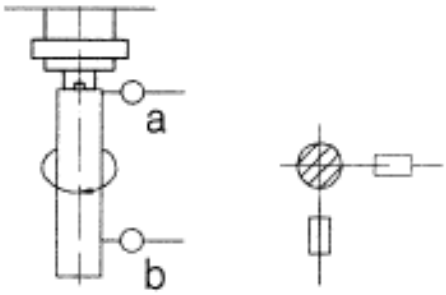	**a)Near spindle nose 0.015 b)At a distance of 100 form spindle nose 0.02**	

ACCURACY TEST FOR MILLING & DRILLING MACHINE			Total 2 P1
No.	Checking items	Tolerance	Error tested
G5	**Parallelism of worktable movement to worktable surface** 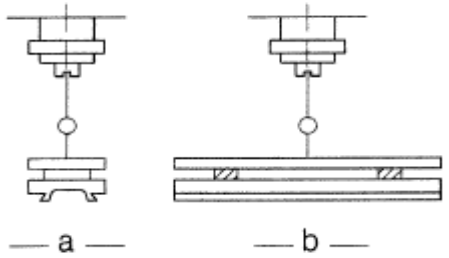 	**a 0.02 for any 100 testing length** **b 0.0.3 for any 300 testing Max 0.06**	
G6	**Squarencess of spindle rotating line to worktable surface** 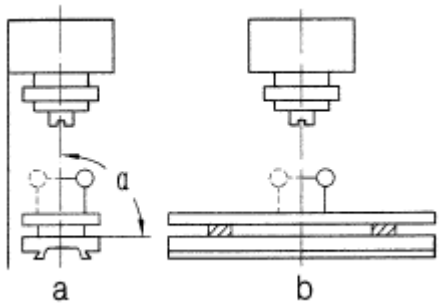 	**a 0.05/300** **a≤90º** **b 0.05/300**	
G7	**Squareness of spindle sleeve vertical movement to worktable surface** 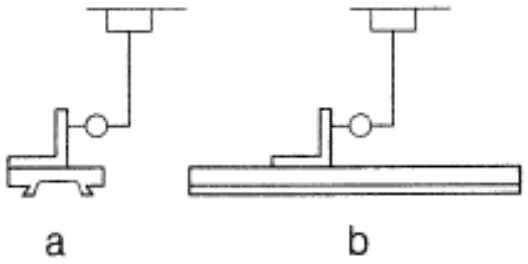 	**a 0.05/100** **b 0.05/100**	

PACKING LIST FOR

GEARED HEAD DRILLING & MILLING MACHINE JMD-45L

Series No : G/W :			Dimension : N/W :		
No.	Name	Spec	Model	Quantity	Remark
1	Milling & drilling machine		JMD-45L	1	
2	Draw bar	M12		1	
3	Adapter	ISO30/MT3		1	
4	Taper shank for drilling chunck	IS030/B16		1	
5	Drilling chuck	Φ1～Φ13		1	
6	T slot bolt	M12×55		2	
7	Washer	12		2	
8	Nut	M12		2	
9	Inner hexagonal spanner	2.5/3、4、5		4	
10	Tilted wedge			1+1	
11	Spanner	19-22		1	
12	Oil gun			1	
13	Handle			3	
14	Hand wheel			3	
15	Screw	M6x12		3	
16	Washer	6		3	
17	Instruction Manual			1	
18	Certificate of inspection			1	
19	Packing list			1	

Packing inspector_____

Date_____