JTL-618DTC DRO	Tool Room Lathe

JTL-618DTC DRO…... ITA618 …... 3~400V, 50Hz

PARTS LIST

JPW (Tool) AG.
Ackerstrasse 45
CH-8610 Uster
Switzerland.

www.jettools.com

P-ITA618 2019-10

Headstocks Assembly

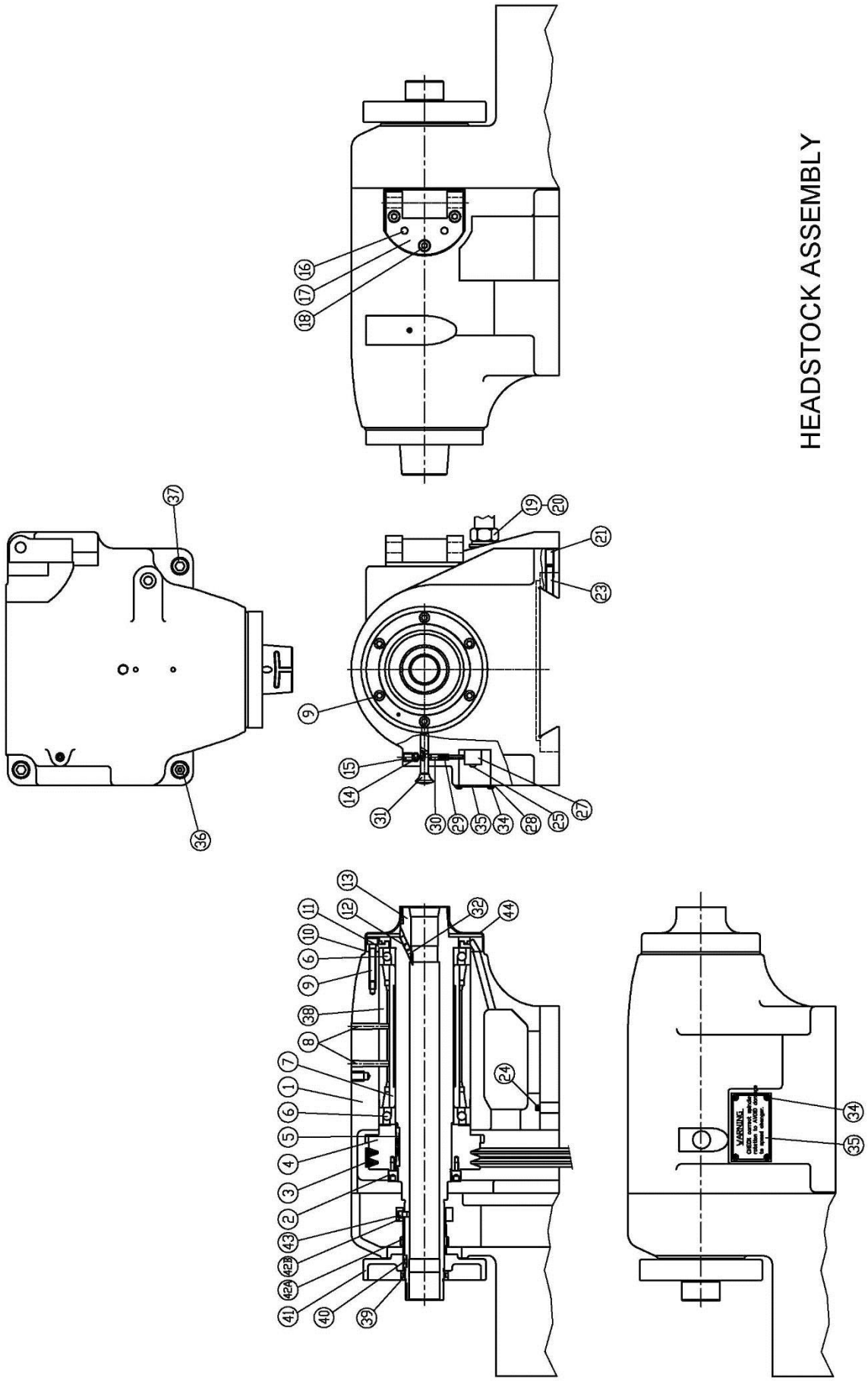

Headstocks Assembly

Index No.	Part No.	Description	Size	Q'ty
1	LT-01-101	Headstock		1
2	LB-01-102	Spindle Nut		1
3	2-3V0670	Belt		1
4	LT-01-102F	Spindle Pulley		1
5	KD02B042	Key		1
6	BB7014CP4	Bearing		2
7	LT-01-103	Bearing Spacer		1
8	PT5#50	Taper Pin		1
9	LB-01-113	Screw		6
10	LB-01-107	Gasket		1
11	LB-01-108	Front Cap		1
12	SL06008	Lock Screw		1
13	LT-01-104	Spindle		1
14	L-1014	Lock Screw		1
15	SL06B08B	Screw		1
16	PD05B112B	Pin		2
17	L-1017	Collet Closer Bracket		1
18	SA08035	Screw		3
19	PCL-04B 1/2"	Connector Queker		1
20	PCB-04B 1/2"	Connector Straight		1
21	SL10020	Lock Screw		1
23	L-1023	Locking Plug		1
24	L-1024	Seal		1
25	SC04025	Screw		2
27	Z-15G-B	Micro Switch		1
28	L-1029	Seal		1
29	L-1031	Spring		1
30	LT-01-116	Plunger		1
31	L-1032	Lock Pin		1
32	L-1033	Key Screw		1
34	SN04008	Screw		4
35	L-1036	Name Plate		1
36	LT-01-117	Screw		4
37	SA12040	Screw		3
38	LT-01-105	Bearing Spacer		1
39	LB-01-101	Nut		1
40	KD02B14	Key		1
41	LT-01-106	Hand Wheel		1
42A	LT-01-107A	Driver Gear		1
42B	LT-01-107S	Gear Cover		1
43	SL08005	Screw		1
44	LB-01-115	Coolant Shield		1

Collet Closer Assembly

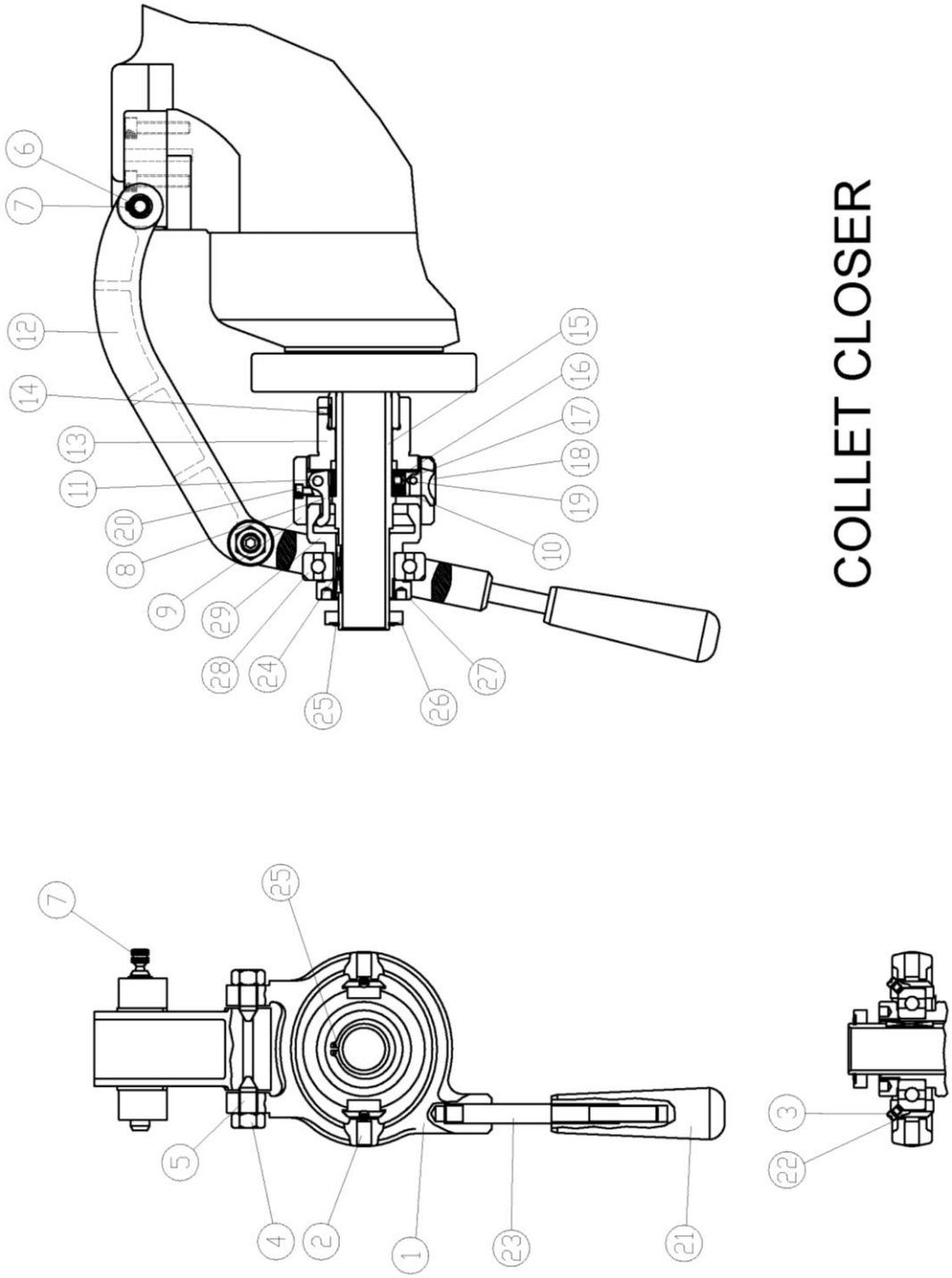

Collet Closer Assembly

Index No.	Part No.	Description	Size	Q'ty
1	L-2001	Lever Yoke		1
2	L-2002	Swivel Block		2
3	L-2003	Screw		2
4	NH12F	Nut		2
5	L-2005	Pivot Screw		2
6	RCS13	Snap Ring		1
7	L-2007	Link Pin		1
8	L-2008	Clutch Finger		3
9	L-2009	Shell Guard		1
10	L-2010	Bracket		1
11	PD04B104B	Pin		3
12	LT-02-001	Connecting Link		1
13	LT-02-002	Adjusting Key		1
14	L-2014	Key		1
15	LT-02-003	Collet Spindle		1
16	L-2016	Spring		1
17	L-2017	Spring Cap		1
18	L-2018	Adjusting Finger		1
19	PD03B14B	Pin		1
20	SA05010	Screw		4
21	L-4001	Lever Handle		1
22	L-2022	Spring		2
23	L-2023	Handle		1
24	KD02B104B	Key		1
25	RCS34	Snap Ring		1
26	L-2026	Stop Ring		1
27	L-2027	Nut		1
28	L-2028	Bearing		1
29	L-2029	Clutch Cone		1

Threading Box Assembly

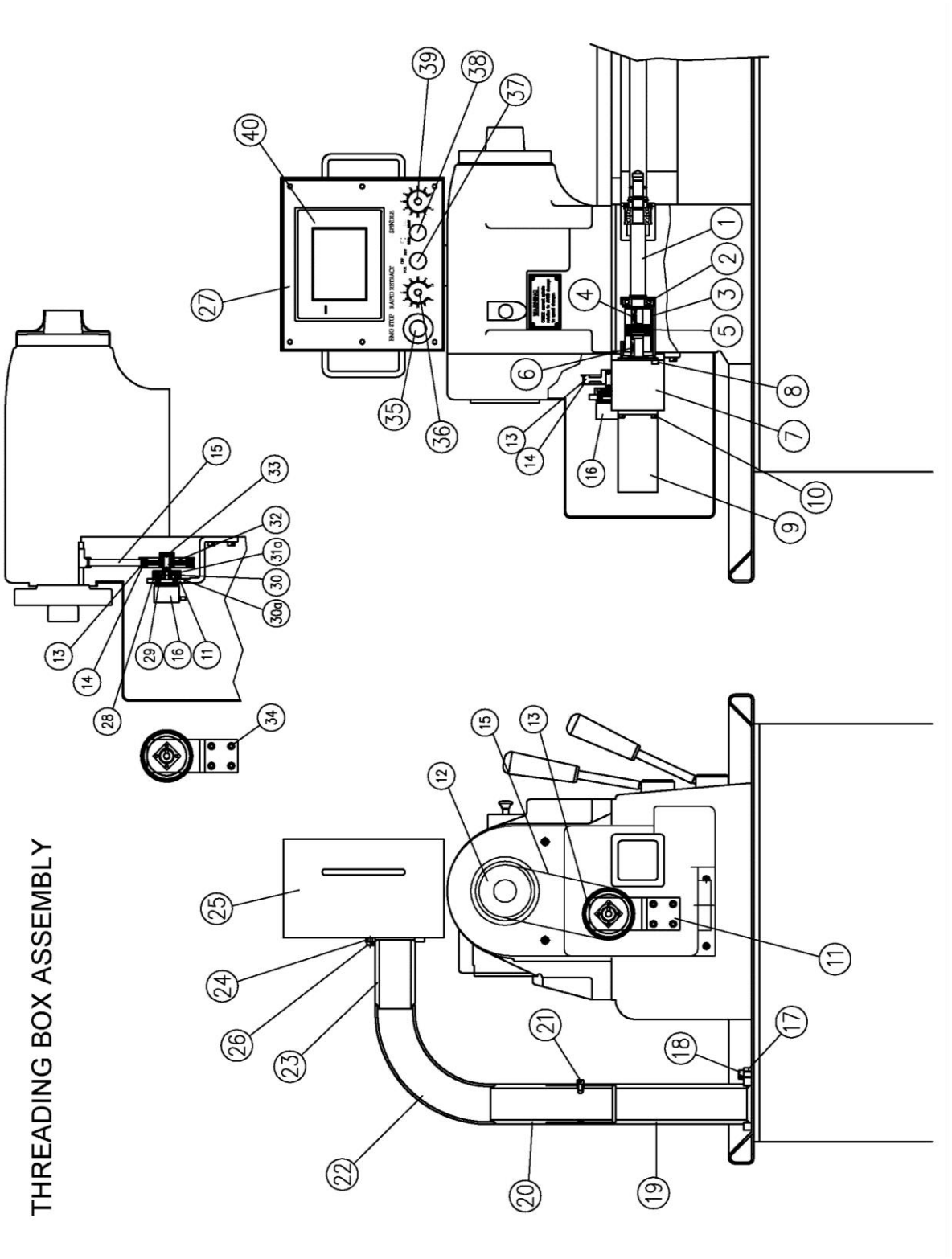

Threading Box Assembly

Index No.	Part No.	Description	Size	Q'ty
1	LT-11-038E	Shaft		1
2	BB6204ZZ	Bearing		1
3	LT-11-054E	Support		1
4	KD050522	Key		1
5	118122	Coupling (Z-Axis)		1
6	KD050525	Key		1
7	SR060-005-P1-400	Plant Reducer		1
8	SA06020	Screw		4
9	ECMA-C10604PS	Server Motor		1
10	SA05016	Screw		4
11	LT-11-055e	Encoder Of Support		1
12	606031	Spindle Revolution Gear		1
13	606030	Encoder Gear		1
14	606032	Belt Cover		4
15	5M-565-10W	Encoder Belt		1
16	OEW2-1024-2MD	Encoder		1
17	LT-11-058AE	Operator box Base A		1
18	SA08020	Screw		3
19	LT-11-058BE	Operator box Base B		1
20	LT-11-058CE	Operator box Base C		1
21	SA06010	Screw		1
22	LT-11-058DE	Operator box Base B		1
23	LT-11-058EE	Operator box Base C		1
24	LT-11-058FE	Operator box Base B		1
25	LT-11-058GE	Operator box Base C		1
26	SA06012	Screw		3
27	LT-11-059E	Control Plant		1
28	LT-11-055AE	Contact Board		1
29	BB6901ZZ	Bearing		1
30	SA03020	Screw		4
30A	LT-11-055AE-1	Block		1
31A	SL04006	Screw		1
32	LT-11-055CE	Shaft		1
33	SA05008	Screw		1
34	SL05008	Screw		1
35	25mm 1B R	Emergency Stop		1
36	VR-2K 202	Speed Control		1
37	800FP-SM32 3A-3 B	Select Switch		1
38	XB7-ED21 1A-2	Select Switch		1
39	VR-2K 202	Speed Control		1
40	DOP-BO5S111	Pod		1

Bed Assembly

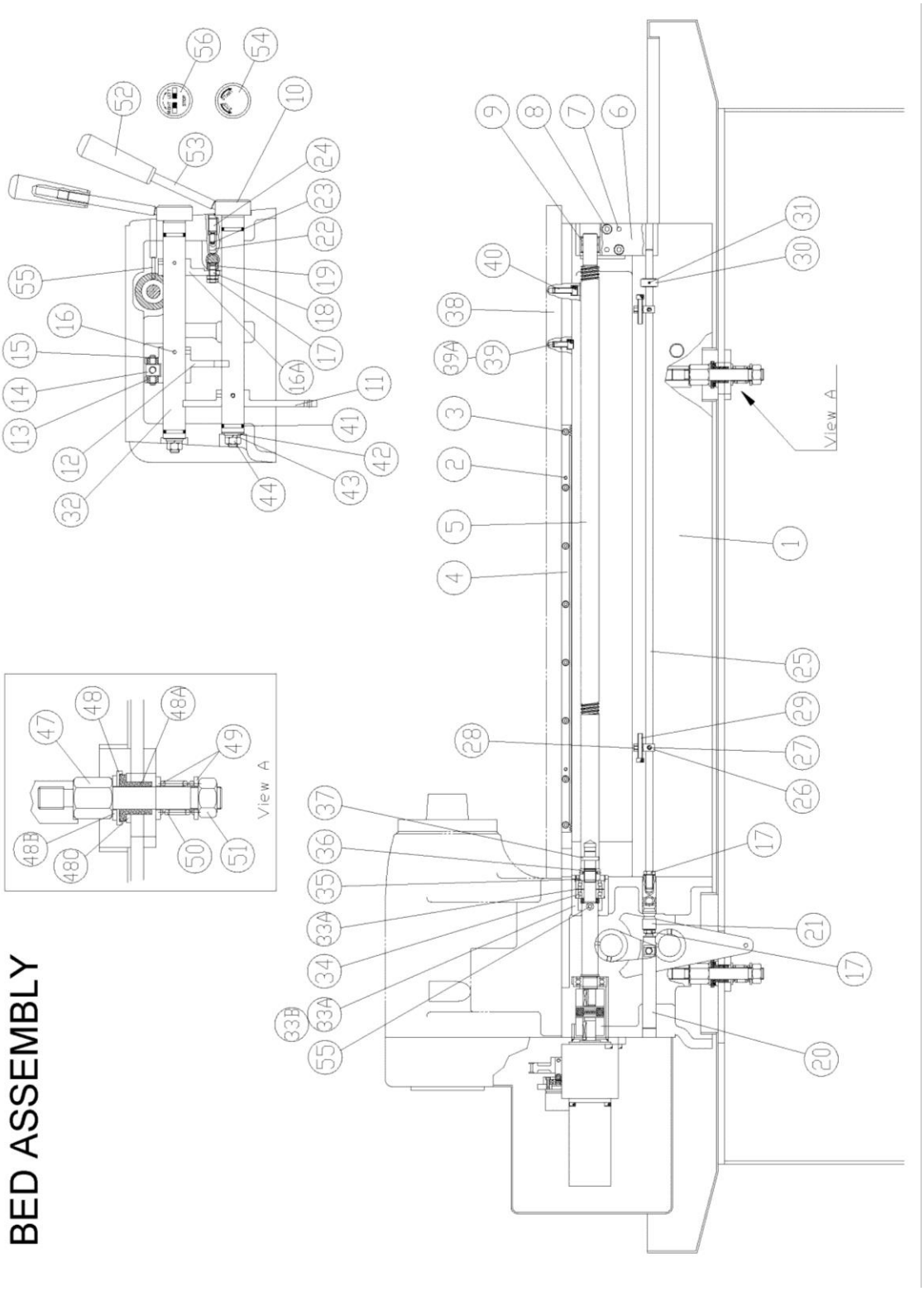

Bed Assembly

Index No.	Part No.	Description	Size	Q'ty
1	LT-03-101	Bed Body		1
2	PD03B16B	Pin		2
3	SA05012	Screw		8
4	LT-03-102	Rack		1
5	LT-03-103	Lead Screw		1
6	LT-03-104	Lead Screw Support		1
7	PT7-64	Taper Pin		2
8	SA08045	Screw		2
9	RNA6902	Noddle Bearing		1
10	LT-03-105	Speed Lever		1
11	LT-03-106	Speed Arm		1
12	LT-03-107	Reverse Arm		1
13	LT-03-108	Fixed Block		2
14	LT-03-109	Swivel Shaft		1
15	RCSOB	Snap Ring		2
16	PT03045	Taper Pin		3
16A	LT-03-110	Reverse Arm		1
17	LT-03-111	Nut		4
18	LT-03-112	Screw		1
19	LT-03-113	Guide Block		1
20	LT-03-114	Guide Bar		1
21	LT-03-115	Locating Link		1
22	LT-03-116	Dowel		1
23	LT-03-117	Spring		1
24	SL12020	Lock Screw		1
25	LT-03-118	Length Control Bar		1
26	LT-03-119	Damper		2
27	SL06006	Lock Screw		2
28	SL05006	Lock Screw		2
29	SA06035	Screw		2
30	LT-03-120	Fixed Block		2
31	SP03025	Taper Pin		1
32	LT-03-121	Length Control Lever		1
33	LT-03-122	Bearing Spacer		1
33A	LT-03-122A	Bearing Spacer		1
33B	LT-03-122B	Bearing Spacer		1
34	BB72032Z	Bearing		2
35	LT-03-123A	Lock Nut		1
36	LT-03-124	Lock Nut		1
37	PT3-25	Taper Pin		1
38	LB-03-013	Bed Plate		1
39	SA08020	Screw		28
39A	WS08B	Lock Washer		17
40	SA08025	Screw		14
41	ORP25	O Ring		4
42	L-5008	Washer		2
43	L-5010	Spring Washer		2
44	NH08BF	Nut		2
47	LB-03-021	Hold Down Stud		3
48	LB-03-025	Washer		3
48A	LB-03-026	Spacer		3
48B	LB-03-022	Washer		10
48C	LB-03-027	Washer		3
49	WB10B	Washer		6

Index No.	Part No.	Description	Size	Q'ty
50	LB-03-024	Spring		3
51	NH10BF	Nut		3
52	L-4001	Ball Handle		2
53	L-5004A	Lever		2
54	LT-03-126	Speed Plate		1
55	PD03B104B	Pin		1
56	L-5006	Reverse Forward Plate		1

Pedestal Assembly

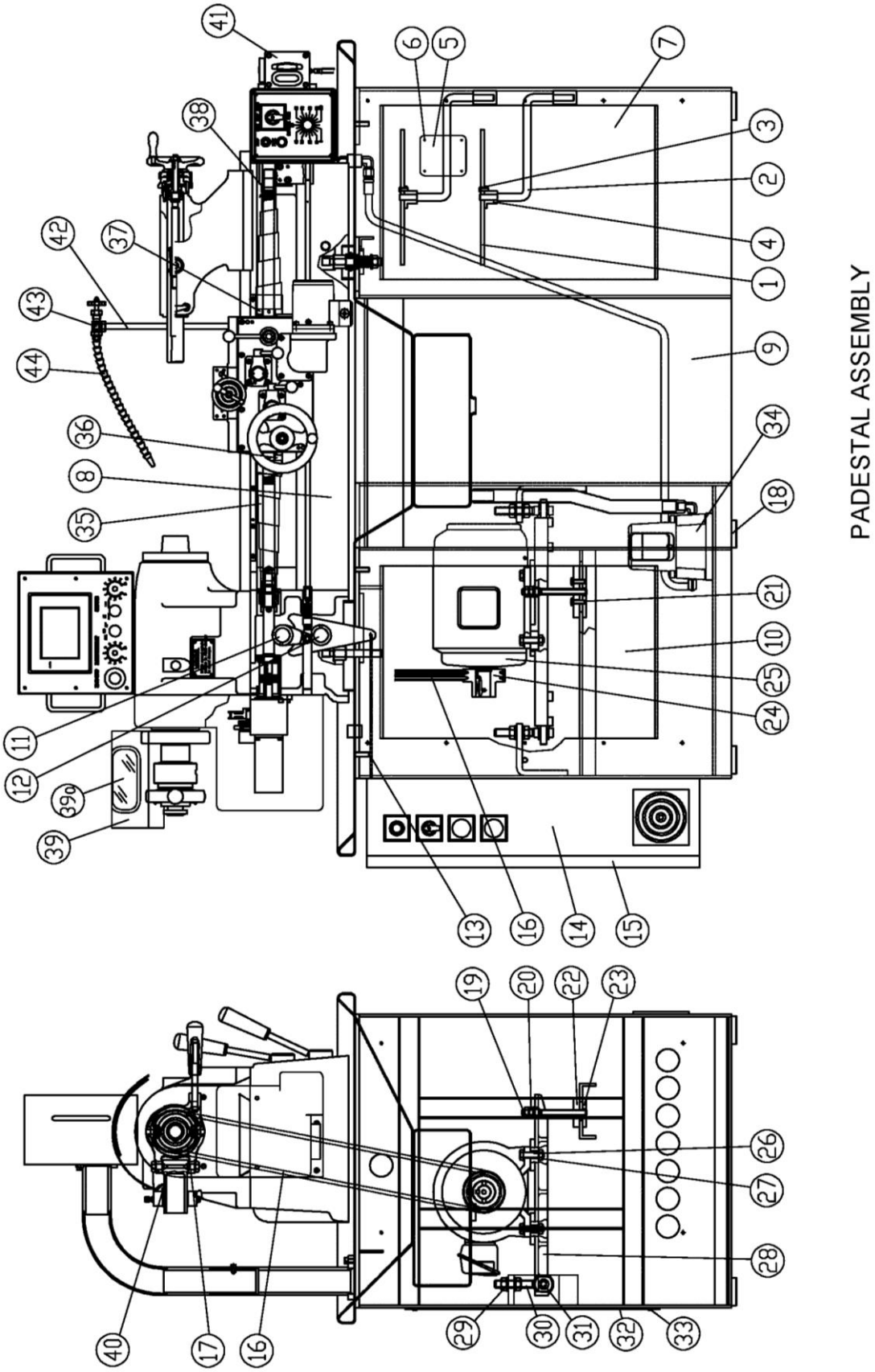

Pedestal Assembly

Index No.	Part No.	Description	Size	Q'ty
1	LB-04-009	Colet Holder Plate		1
2	LB-04-006	Pull Rod		1
3	SN06015	Screw		3
4	LB-04-008	Bushing		1
5	JTL-618-E5	Nameplate		1
6	MP 02	Nameplate Pin		4
7	JTL-618-E7	Right Side Door		1
8	LT-03-101	Bed Body		1
9	LT-04-003	Pedestal		1
10	JTL-618-E10	Left Side Door		1
11	LT-03-121	Control Lever		1
12	LT-03-105	Hi-Low Control Lever		1
13	LB-04-005	Pull Rod		1
14	JTL-618-E14	Panel		1
15	JTL-618-E15	Panel Cover		1
16	2-3V0670	Belt		1
17	LT-01-102F	Pulley		1
18	LB-04-001A	Adjusting Screw		6
19	L-6143	Support Stud		1
20	HN08BF	Hex Nut		2
21	SH08025	Hex Head Screw		2
22	L-6145	Upper Support Plate		1
23	L-6142	Lower Support Plate		1
24	LT-04-012F	Pulley		1
25	JTL-618-E25	Spindle Motor		1
26	SH12035	Hex Head Screw		4
27	HN012	Hex Nut		4
28	LB-04-010	Shelf		1
29	HN10BF	Hex Nut		2
30	L-6164	Hinge Eye Bolt		2
31	L-6146	Rod		2
32	L-6165	Rear Cover		1
33	SH06012	Screw		4
34	LB-08-006	Pump		1
35	118143	Cover		2
36	LT-03-103A	Screw		1
37	LT-03-103B	Screw		1
38	LT-03-103C	Screw		1
39	LT-04-004	Cover		1
39a	LT-04-004-1	Plastic Board		1
40	SN05008	Screw		2
41	YMT-8	Manual Lubricators		1
42	L-6604A	Elbow Support		1
43	CS-5001	Needle Valve		1
44	JTL-618-E44	Nozzle	1/4"×1'L	1
	EA0111	Z-axis linear scale (not show)	500mm	1

Carriage Assembly

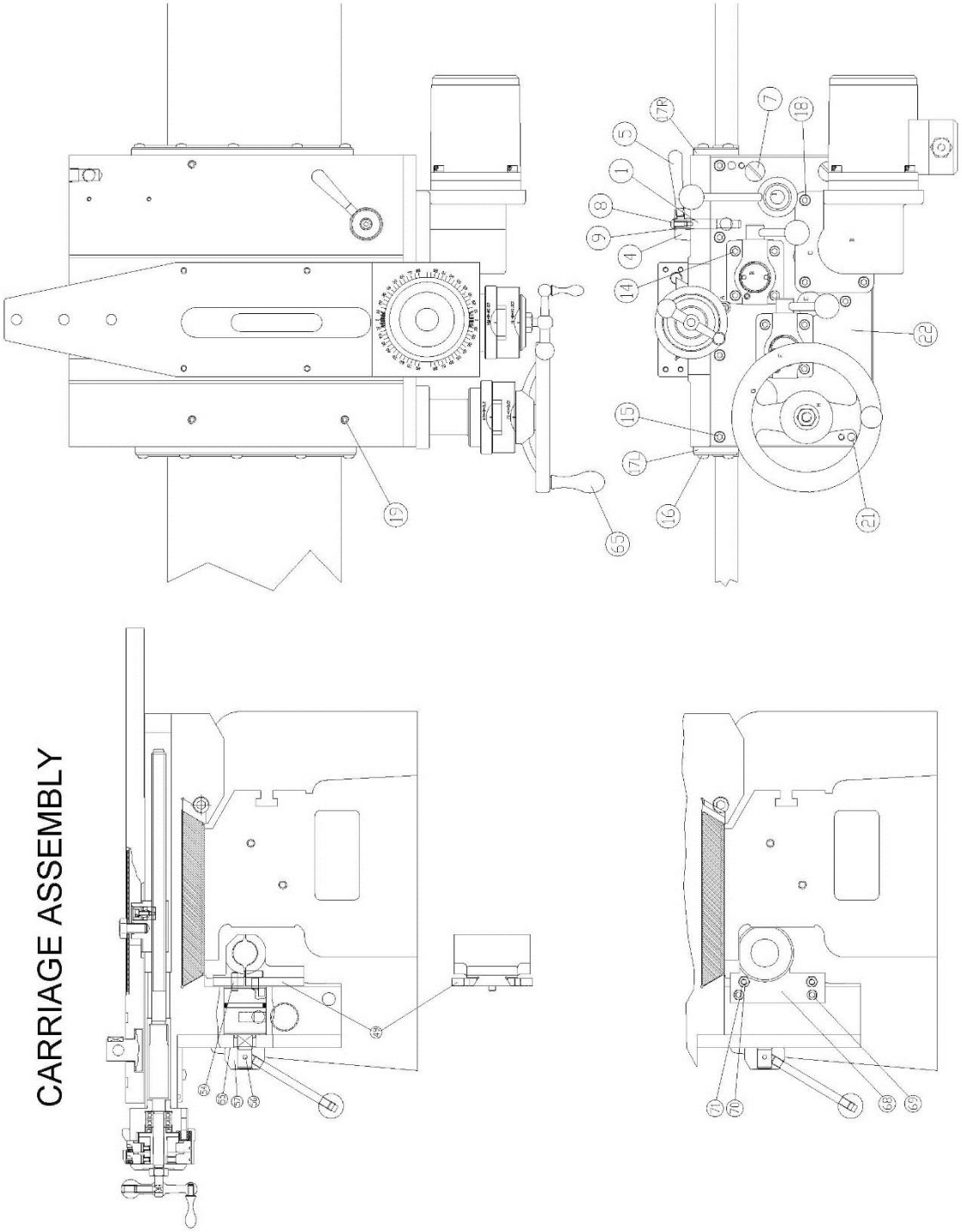

Carriage Assembly

Index No.	Part No.	Description	Size	Q'ty
1	LT-05-104	Eccentric Rod		1
2	LT-05-105	Taper Plug		1
3	LT-05-106	Plug		1
4	LT-05-107A	Hub Block		1
5	LT-05-108	Handle		2
7	LT-05-321	Plug Cock		2
8	SN03B05B	Screw		2
9	L-4065A	Washer		2
14	SA03B12B	Screw		8
15	SA04B10B	Screw		7
16	SN06016	Screw		14
16A	WE04B	Washer		14
17L	LB-05-114B	Left Wiper		1
	LB-05-114C	Left Cover		1
17R	LB-05-114A	Right Wiper		1
	LB-05-114C	Right Cover		1
18	SA05B12B	Screw		3
19	SL05B05B	Lock Screw		3
20	SA05B05B	Screw		3
21	PD05B16B	Pin		2
22	LT-05-109	Gear Box Cover		1
	EA0110	X-axis linear scale (not show)	150mm	1

Gear Box of Carriage Assembly

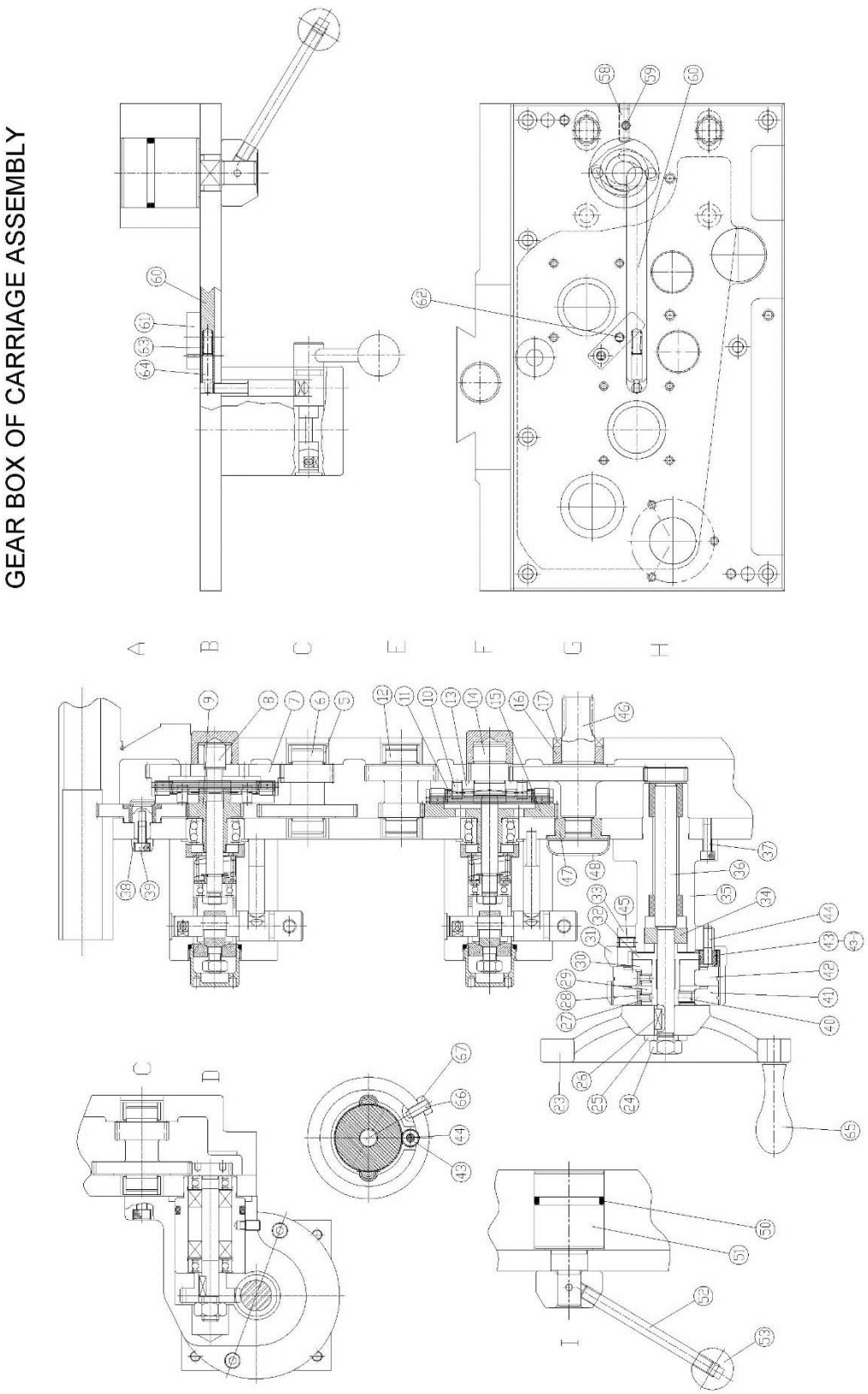

Gear Box of Carriage Assembly

Index No.	Part No.	Description	Size	Q'ty
1	LT-05-301	Carriage		1
2	LT-05-302	Gear Assembly		1
4	LT-05-303	Stud		1
5	BAM128	Needle Bearing		4
6	LT-05-304	Gear		1
7	LB-05-306	Clutch Bushing		1
8	LB-05-307	Clutch Shaft		1
9	LB-05-308	Pinion		1
10	LB-05-330	Clutch Pin		6
11	RCS06	Snap Ring		6
12	LT-05-305	Gear		1
13	LB-05-308A	Clutch Fixed Plate		2
14	LB-05-328	Clutch Shaft		1
15	LB-05-329	Clutch Bushing		1
16	LT-05-318	Bearing Brass		1
17	OS20307	Seal		1
18	LB-05-305	Brake Plate		4
19	LB-05-310	Clutch Disc		2
20	LB-05-301	Bowed Washer		2
21	LB-05-337	Bearing		2
22	RCS35	Snap Ring		2
23	LT-05-322EM99	Hand Wheel		1
24	NH10	Nut		1
25	WB10	Washer		1
26	KD04012	Key		1
27	LT-09-121	Spring		2
28	LT-05-432	Key		2
29	LT-05-431	Collar		1
30	LT-05-428	Gear		1
31	LT-05-207EMC	Zero Ring		1
32	LT-05-427	Gear		1
33	LT-05-307EM99	Zero Ring		1
34	LT-05-312EM	Sleeve		1
35	LT-05-311EM99	Support		1
36	LT-05-310EM	Gear Shaft		1
37	SA05016	Screw		3
38	LT-05-303A	Bushing		1
39	SA05010	Screw		1
40	SL06008	Lock Screw		1
41	LT-05-206EC	Dial Ring		1
42	LT-05-206MC	Dial Ring		1
43	LT-05-430	Gear		1
43-1	LT-05-430-1	Anti-Chip Set		1
44	LT-05-429	Shaft		1
45	SL06010	Lock Screw		1
46	LT-05-306	Gear Shaft		1
47	LT-05-320	Bearing Brass		1
48	LT-05-319	Plug		1
49	LT-05-308	Gib Block		2
50	ORP36	O Ring		1
51	LT-05-309	Shift Shaft		1
52	L-7011	Handle Lever		1
53	LB-05-616	Knob		1
54	PD06020	Pin		2

Index No.	Part No.	Description	Size	Q'ty
55	LT-05-313	Shim		1
56	PT2-038	Taper Pin		1
57	LT-05-314	Hub		1
58	SL06020	Lock Screw		1
59	SL05012	Lock Screw		1
60	LT-05-315	Slide Block		1
61	LT-05-317	Fixed Block		1
62	SA05012	Screw		1
63	LB-03-004	Spring		1
64	LT-05-316	Plug		1
65	LT-05-324	Handle		1
66	LT-09-219	Lock Screw		1
67	NH06	Nut		1

Cross and Compound Slide Assembly

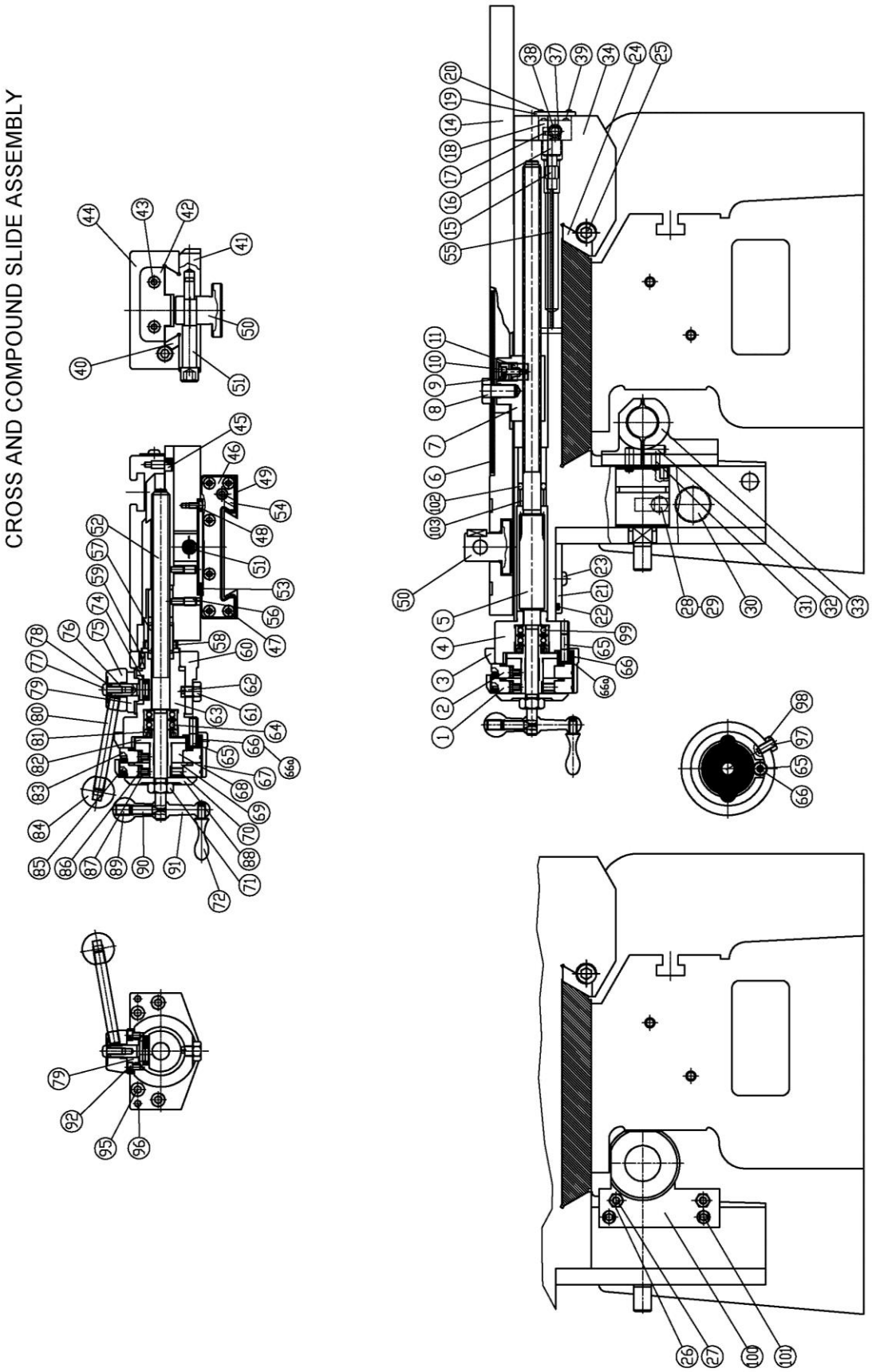

Cross and Compound Slide Assembly

Index No.	Part No.	Description	Size	Q'ty
1	LT-05-206EA	Dial Ring		1
2	LT-05-206MA	Dial Ring		1
3	LT-05-207AEM99	Zero Ring		1
4	LT-05-205EM99	Support		1
5	LT-05-214EM99	Cross-Feed Screw		1
6	LT-05-403	Cover		1
7	LT-05-215	Brass Nut		1
8	SH10012	Hex Screw		1
9	LT-05-217	Lock Screw		1
10	SA04008	Screw		1
11	LT-05-216	Screw Plug		1
14	LT-05-401	Cross Slide		1
15	HE-MV	Meter Unit		3
16	LB-05-207	Connector		3
17	ORP10	O Ring		3
18	LT-05-208	Junction Block		1
19	LT-05-209	Cover		1
20	SN05010	Screw		4
21	LB-05-217	Cover		1
22	LB-05-201	O Ring		1
23	SN06012	Screw		2
24	LT-05-210	Carriage Gib		1
25	LB-05-216	Lock Screw		6
26	NH06	Nut		2
27	SL06020	Lock Screw		2
28	OC04B	Oil Cup		1
29	LB-05-206	Instruction Name Plate		1
30	OW21	Oil Window		1
31	PD04B008B	Pin		1
32	PD04B012B	Pin		2
33	LT-05-218	Lead Screw Nut		1
34	LT-05-301	Carriage		1
37	ORP8	O Ring		1
38	SP-02PT	Oil Plug		1
39	SN05025	Screw		4
40	LT-05-414	Compound Slide Gib		1
41	LT-05-410	Compound Slide Base		1
42	LT-05-412	Wiper		1
43	SN05008	Screw		2
44	LT-05-415	Compound Slide		1
45	SA06010	Screw		1
46	LT-05-112A	Cover		1
47	SN05008	Lock Screw		6
48	SB04008	Screw		2
49	LT-05-112N	Wiper		1
50	LT-05-406	Lock Block		1
51	LT-05-407	Eccentric Shaft		1
52	LT-05-408EM99	Compound Slide Screw		1
53	LT-05-404	Locating Ring		1
54	LT-05-402	Cross Slide Gib		1
55	HE-PB4	Compression Sleeve		3
56	LB-03-003	Lock Screw		2
57	LT-05-409	Nut		1
58	LT-05-411	Lock Screw		1

Cross and Compound Slide Assembly

Index No.	Part No.	Description	Size	Q'ty
59	KD04012	Key		1
60	LT-05-416	Quick-Acting Base		1
61	NH08	Nut		1
62	LT-05-413	Eccentric Screw		1
63	LT-05-417EM99	Quick-Acting Shaft		1
64	BB6000	Bearing		2
65	LT-05-429	Shaft		2
66	LT-05-430	Gear		2
66A	LT-05-430-1	Cover		2
67	LT-05-207BEM99	Zero Ring		1
68	LT-05-428	Gear		1
69	LT-05-431	Collar		2
70	SL06008	Screw		2
71	LT-03-111	Nut		2
72	LT-05-103	Handle		2
74	LT-05-419	Guide Block		1
75	LT-05-107	Hub Block		1
76	LT-05-418	Eccentric Rod		1
77	SN05012	Screw		1
78	L-4065A	Washer		1
79	LT-05-420	Support		1
80	L-7011	Lever		1
81	LT-05-204	Lock Nut		2
82	LT-05-427	Gear		2
83	LT-05-206MC	Dial Ring		1
84	LB-05-616	Knob		1
85	LT-05-206EC	Dial Ring		1
86	LT-05-432	Key		4
87	LT-09-121	Spring		4
88	LT-05-203	Cover Plate		2
89	SL08012	Screw		2
90	LT-05-101	Lock Pin		2
91	LT-05-102	Crank		2
92	SA04006	Screw		2
95	SN06020	Screw		4
96	PD03016B	Pin		2
97	LT-05-219	Lock Screw		1
98	NH06	Nut		1
99	BB6000Z	Bearing		2
100	LT-03-103B	Cover		1
101	SA06016	Screw		2
102	OS14227	Oil Seal		1
103	4900UU	Bearing		1

Clutch Assembly

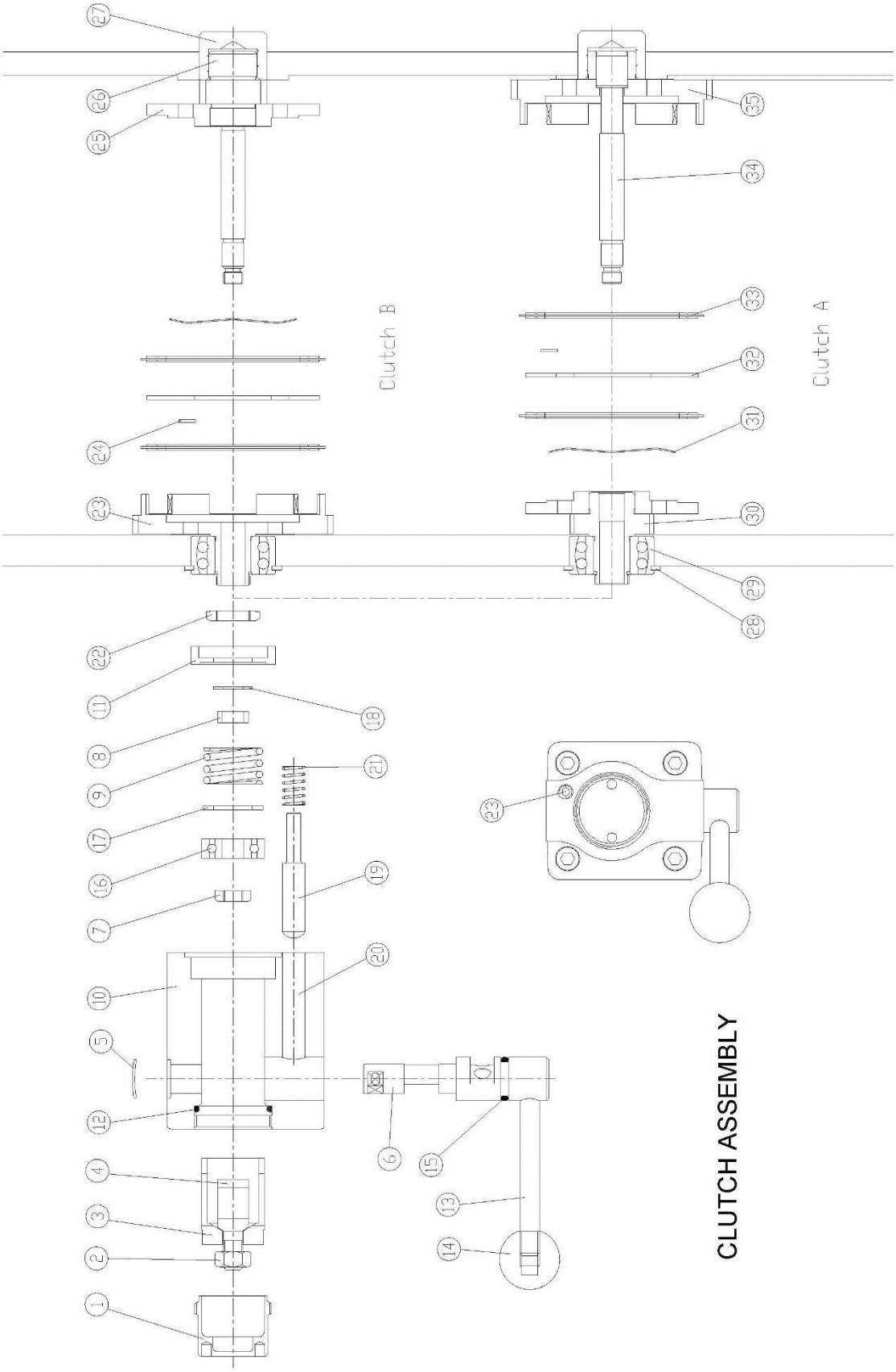

Clutch Assembly

Index No.	Part No.	Description	Size	Q'ty
1	LB-05-613	Cover		2
2	NH08NF	Nut		2
3	LB-05-611	Pressure Sleeve		2
4	LB-05-612	Adjusting Bolt		2
5	LB-05-610	Plug		2
6	LT-05-601	Clutch Cam		2
7	NH08NF	Nut		2
8	LB-05-609	Bearing Spacer		2
9	LB-05-608	Spring		2
10	LB-05-602	Clutch Body		1
11	LB-05-605	Spring Seat		2
12	ORP28	O Ring		2
13	LB-05-615	Handle		2
14	LB-05-616	Knob		2
15	ORP14	O Ring		2
16	BB6292RS	Ball Bearing		2
17	LB-05-607	Washer		2
18	RCS09	Snap Ring		2
19	LB-05-603	Plunger		1
20	LB-05-604	Spring		2
21	LB-05-606	Nut		2
22	LB-05-614	Stop Screw		2
23	LB-05-306	Clutch Bushing		1
24	RCS06	Snap Ring		6
25	LB-05-308A	Clutch Fixed Plate		2
26	LB-05-328	Clutch Shaft		1
27	LB-05-308B	Oilite Bearing		2
28	RCS35	Snap Ring		2
29	LB-05-337	Bearing		2
30	LB-05-308	Pinion		1
31	LB-05-301	Bowed Washer		2
32	LB-05-310	Clutch Disc		2
33	LB-05-305	Brake Plate		4
34	LB-05-307	Clutch Shaft		1
35	LB-05-329	Clutch Bushing		1

A.C Motor Assembly

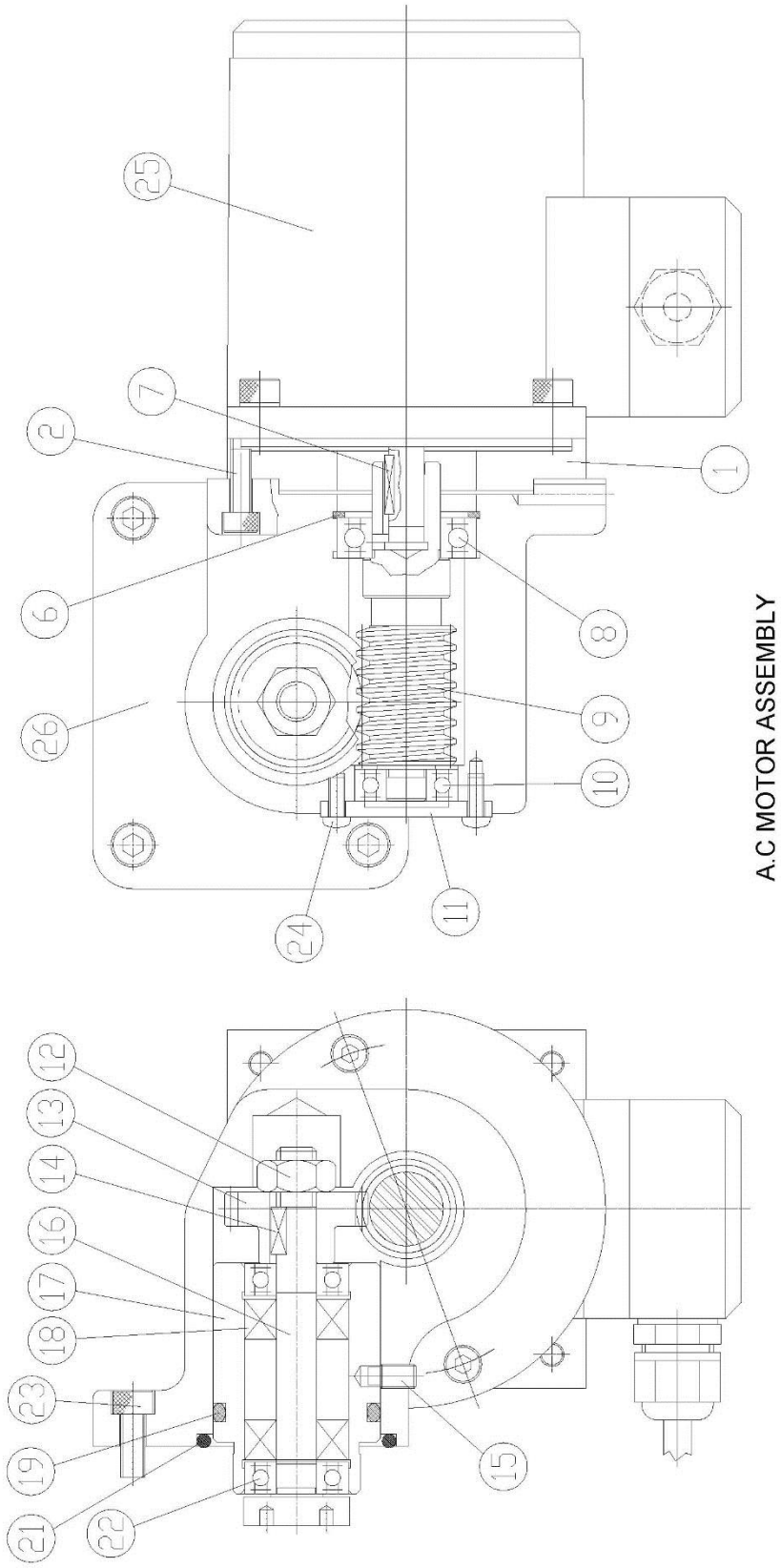

A.C Motor Assembly

Index No.	Part No.	Description	Size	Q'ty
1	LB-05-721-A	Connecting Adapter		1
2	SH05015	Screw		2
3	SA06020	Screw		4
6	RCR35	Retaining Ring		1
7	KD03015	Key		2
8	BB6003ZZ	Bearing		1
9	LT-05-708-1	Worm Shaft		1
10	BB6000ZZ	Bearing		1
11	LT-05-710	Bearing Cap		1
12	NH10NF	Nut		1
13	LT-05-703-1	Worm Gear		1
14	KD04012	Key		1
15	L-8006	Fixed Screw		1
16	LT-05-704	Main Geear Shaft		1
17	LT-05-705	Bearing Bracket		1
18	OS10267	Seal		2
19	ORP042	O Ring		1
20	RCR35	Retaining Ring		1
21	ORP45	O Ring		1
22	BB6000ZZ	Bearing		2
23	SA05015	Screw		1
24	SN04010	Screw		4
25	LB-05-700AC	A.C Motor		1
26	LT-05-707	Speed Box		1

Tailstock Assembly

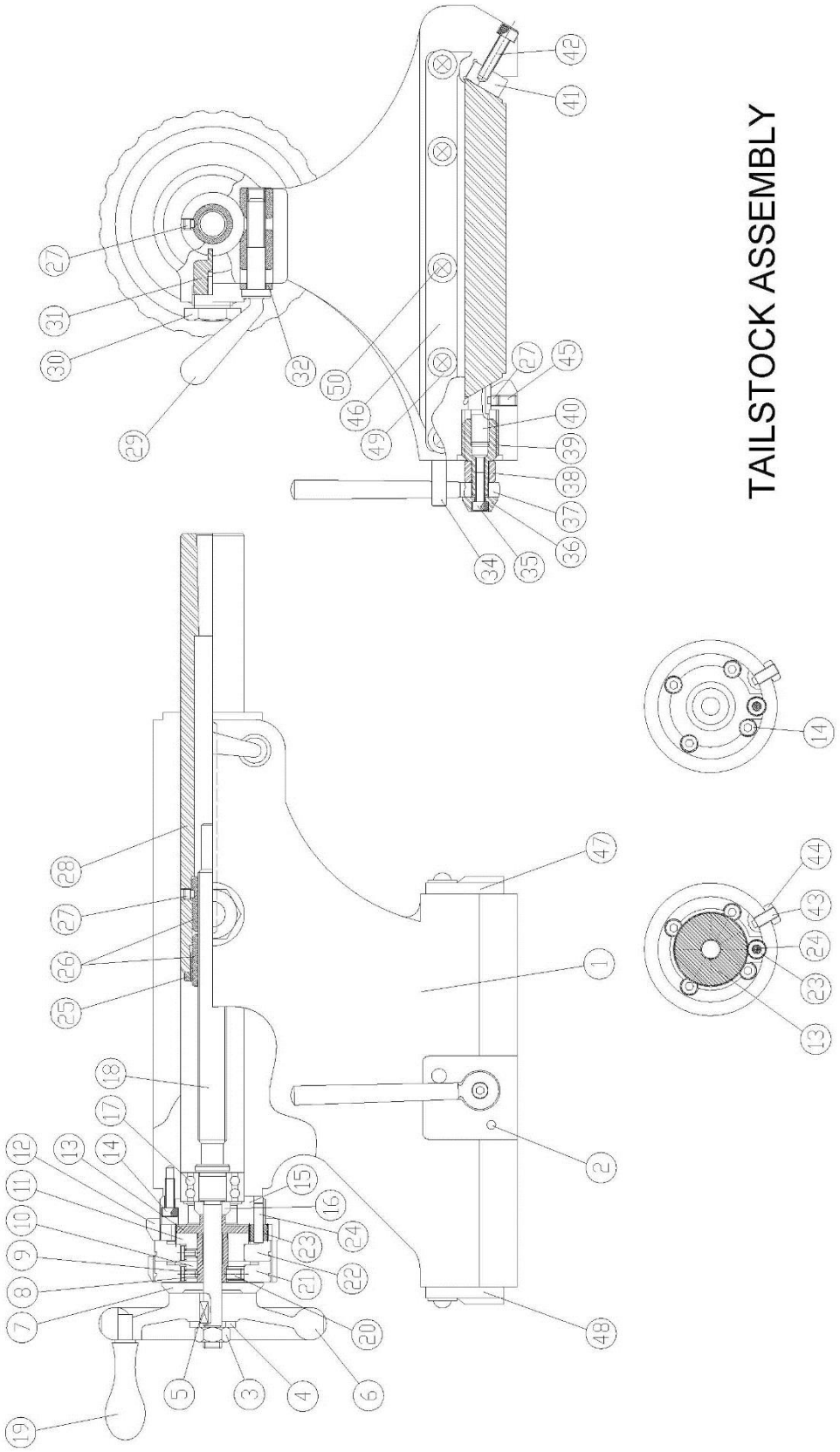

Tailstock Assembly

Index No.	Part No.	Description	Size	Q'ty
1	LT-09-101	Tailstock Body		1
2	PD05040	Pin		1
3	NH10	Nut		1
4	WB10	Washer		1
5	KD04012	Key		1
6	LT-09-102EM99	Handle Wheel		1
7	LT-05-203	Cover Plate		1
8	LT-09-121	Spring		2
9	LT-05-432	Key		2
10	LT-05-431	Collar		1
11	LT-05-428	Gear		1
12	LT-05-207CEM99	Zero Ring		1
13	LT-05-427	Gear		1
14	SA05016	Screw		4
15	LT-09-105EM99	Bearing Spacer		1
16	LT-09-119	Spacer		1
17	LB-05-337	Bearing		1
18	LT-09-107EM99	Screw Shaft		1
19	LT-05-324	Handle Wheel		1
20	SL06008	Screw		1
21	LT-05-206EC	Dial Ring		1
22	LT-05-206MC	Dial Ring		1
23	LT-05-430	Gear		1
24	LT-05-429	Shaft		1
25	LT-09-110	Lock Nut		1
26	LT-09-108	Nut		1
27	LB-05-442	Lock Screw		1
28	LT-09-106	Tailstock Spindle		1
29	LT-09-112	Handle		1
30	LT-09-122	Lock Plug		1
31	LT-09-111	Key		1
32	LT-09-114	Washer		1
33	LT-09-113	Lock Plug		1
34	PD08040	Pin		1
35	SA05016	Screw		1
36	LT-09-116	Plug		1
37	LT-09-115	Handle		1
38	LT-09-117	Bushing		1
39	LT-09-109	Lock Bolt		1
40	LT-09-109A	Lock Block		1
41	LT-09-103	Gib		1
42	SA06025	Screw		4
43	LT-05-219	Screw		1
44	NH06	Nut		1
45	SL06010	Screw		1
46	LT-09-123	Wipper		2
47	LT-09-123A	Left Wipper		1
48	LT-09-123B	Right Wippe		1
49	WB06	Washer		7
50	SN06014	Screw		7

A.C Motor Power Feed Control Assembly

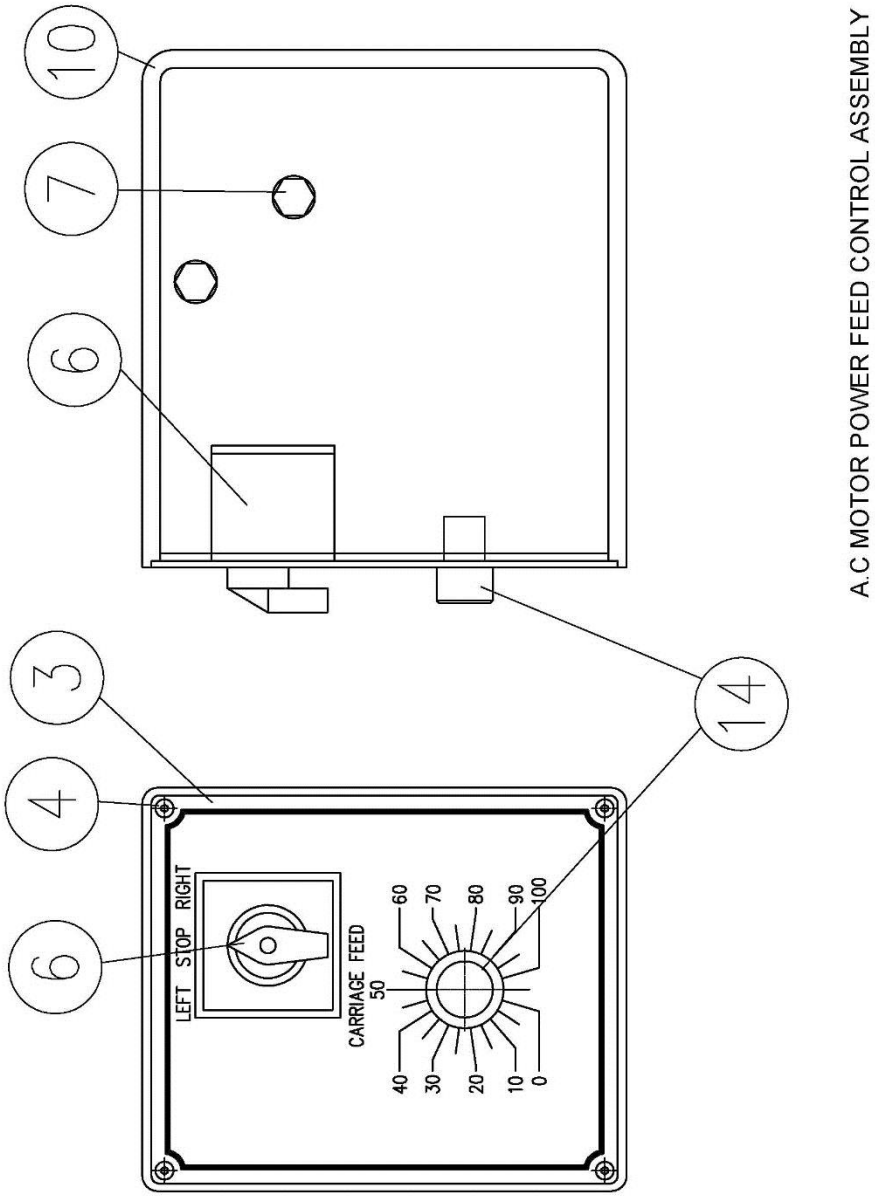

A.C Motor Power Feed Control Assembly

Index No.	Part No.	Description	Size	Q'ty
3	LB-05-501F	Indicator Plate		1
4	SN04008	Screw		4
6	SC68-36 1A 0 1A	Select Switch		1
7	SA08020	Screw		2
10	LB-05-501	Housing		1
14	VR-2K 202	Speed Control		1

Electric Control Panel Assembly

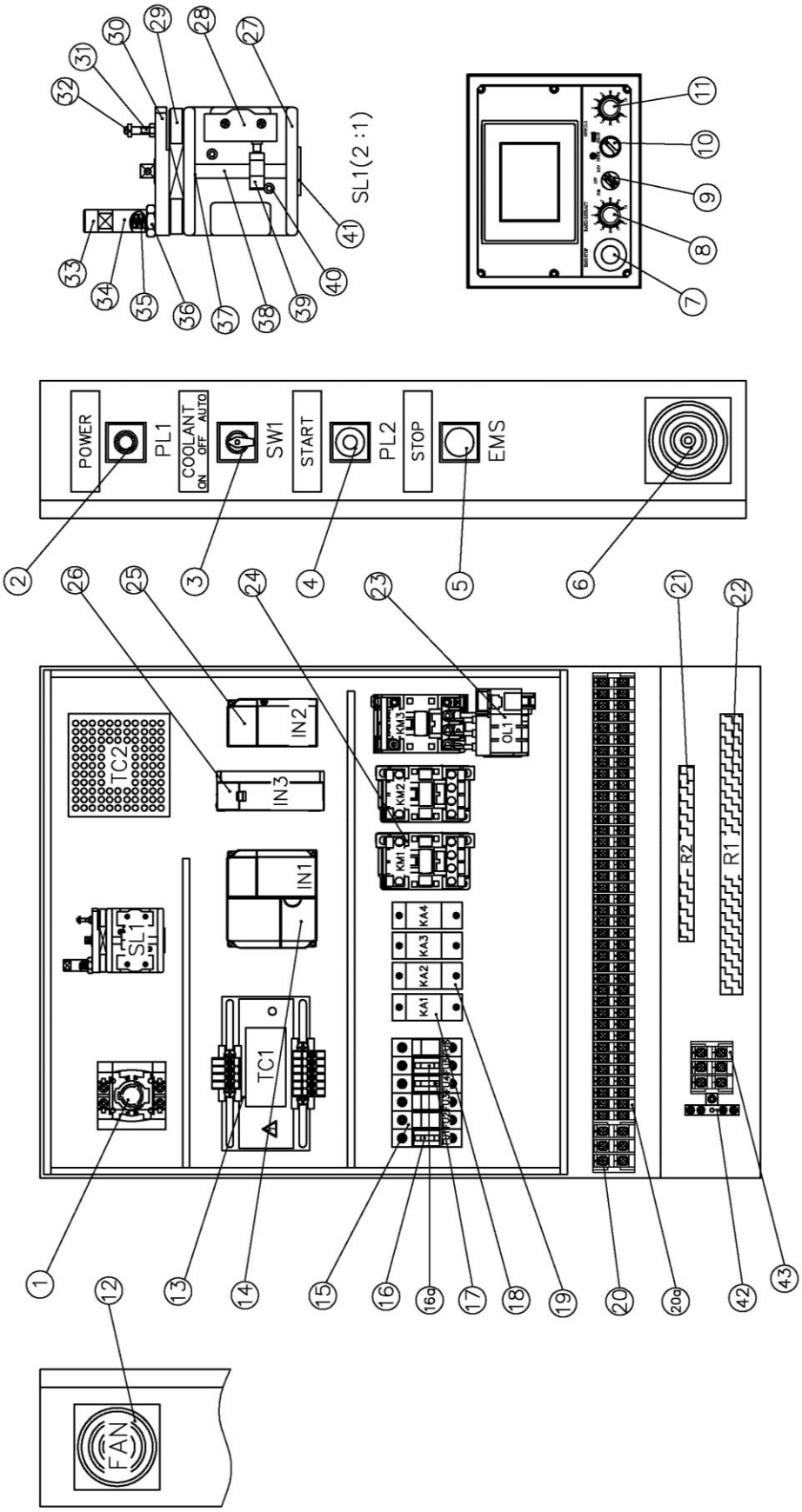

Electric Control Panel Assembly

Index No.	Part No.	Description	Size	Q'ty
1	TO-2-1/V/SVB	Disconnect Switch		1
2	30mm 24V W	Indicate Light		1
3	30mm 2A 3 B	Select Switch		1
4	30mm 1A 24V G	Push Bottom		1
5	30mm 1B R	Push Bottom		1
6	4"	Plastic Cover Filter		1
7	22mm 1B R	Push Bottom		1
8	VR-2K 202	Speed Control		1
9	800FP-SM32 3A 3 B	Select Switch		1
10	XB-ND21 1A 2 B	Select Switch		1
11	VR-2K 202	Speed Control		1
12	4" 220V	Fan		1
13	356VA 220V	Transformer		1
14	V1000 3HP 220V	Inverter		1
15	10*38 1P	Fuse Base		6
16	10*38 20A	Fuse		3
16A	10*38 4A	Fuse		2
17	10*38 6A	Fuse		1
18	MY2NJ AC24V	Power Relay		4
19	PYF08A-E	Relay Base		4
20	IN20BK 3P	Terminal Strip		1
20A	IN13SBKN 3P	Terminal Strip		15
21	70W200 Ω	Brake		1
22	600W50 Ω	Brake		1
23	RHU-10K1 0.75-1A	Overload Relay		1
24	CU-11 3A1A 24V	Contactor		3
25	V1000 0.5HP 220V	Inverter		1
26	ASD-A20421-L	Ac Servo Driver		1
27	L-6701	Switch Base		1
28	Z-15GD-B	Limit Switch		1
29	L-6706	Sleeve		1
30	L-6702N	Swivel Arm		1
31	L-6703	Retaining Bolt		1
32	BB/PHS5	Bearing		1
33	SA10008	Screw		2
34	L-6707	Spring Seat		1
35	L-6708	Spring		1
36	LT-01-247	Nut		1
37	BD10	Ball		1
38	L-6704	Gear Shaft		1
39	L-6705	Eccentric Ring		1
40	SA04012	Screw		2
41	L-6710	Bushing		2
42	4P	Ground Terminal		1
43	IN13SBKN 3P	Terminal Strip		1

JTL-618DTC DRO…... ITA618 …... 3~400V, 50Hz

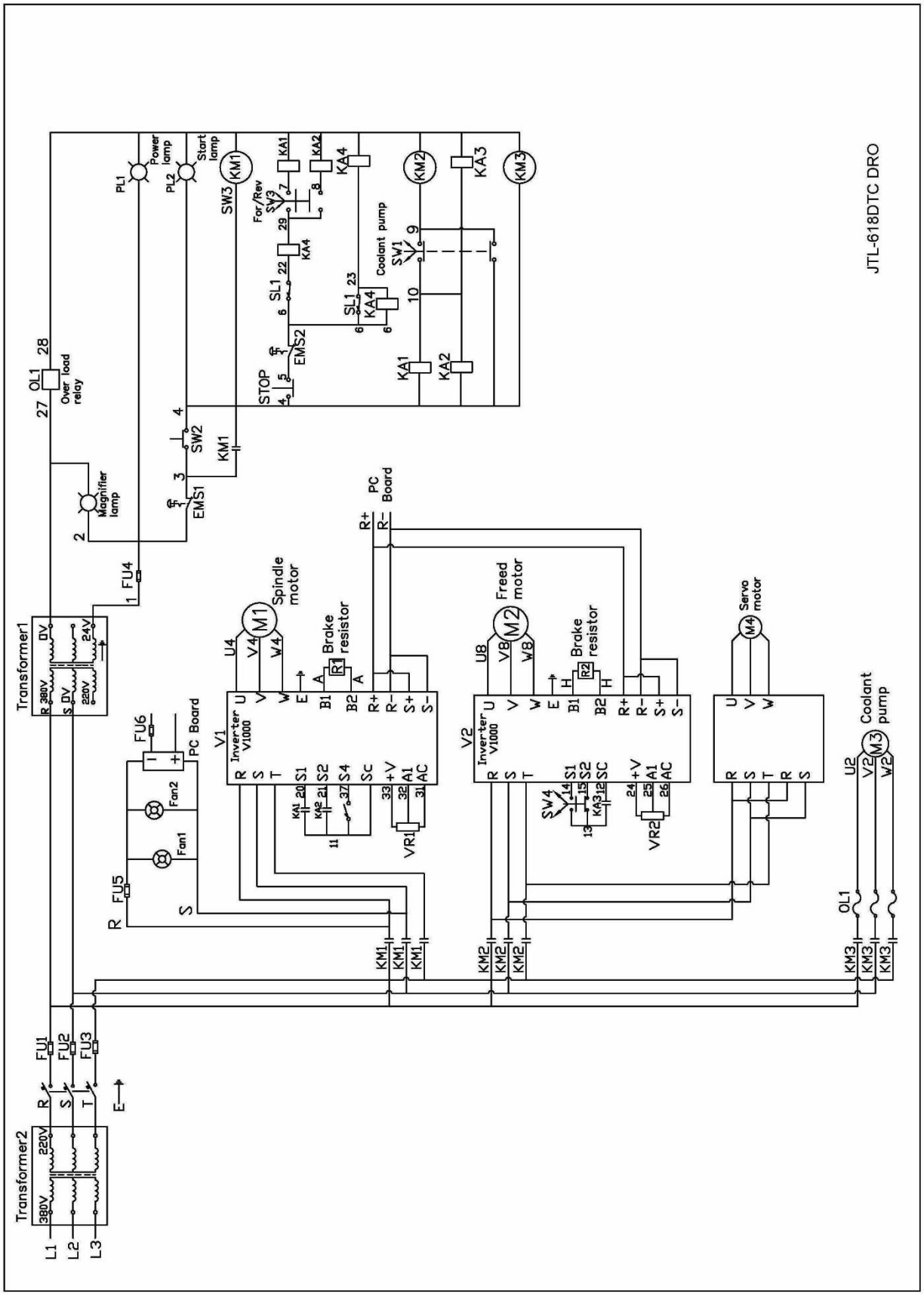

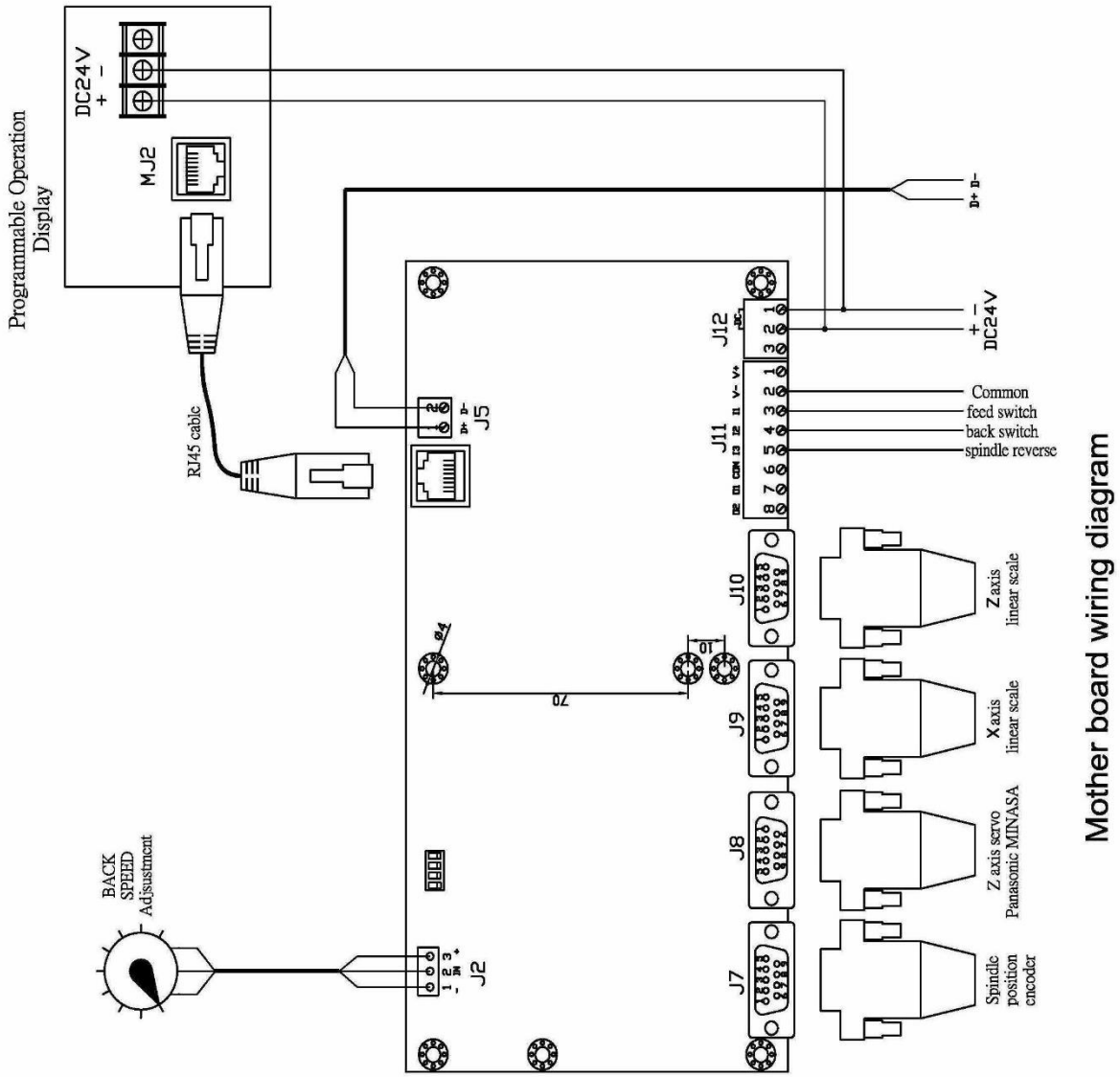
Programmable Operation Display
DC24V
+ −
MJ2
RJ45 cable
J5
J12
J11
J10
J9
J8
J7
J2
BACK SPEED Adjustment
Common
feed switch
back switch
spindle reverse
DC24V
Z axis linear scale
X axis linear scale
Z axis servo Panasonic MINASA
Spindle position encoder
Mother board wiring diagram

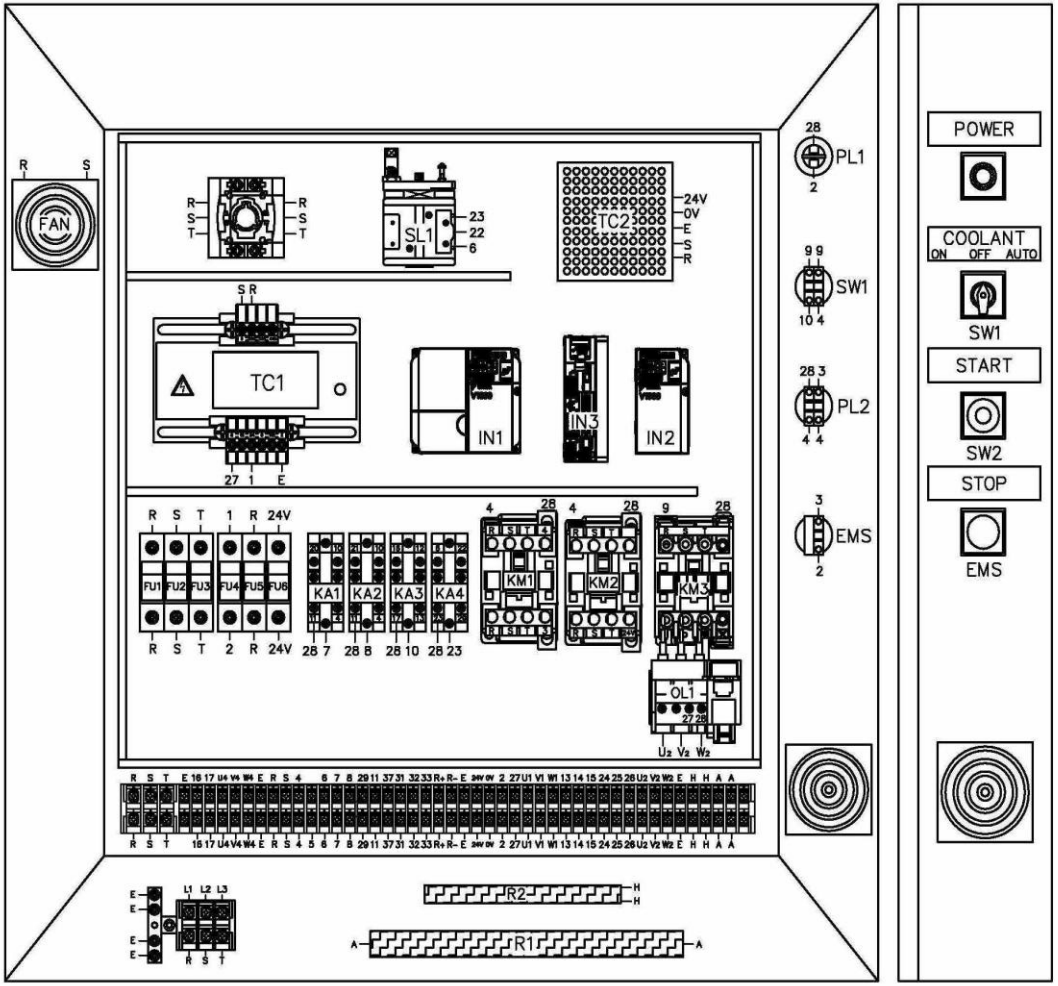

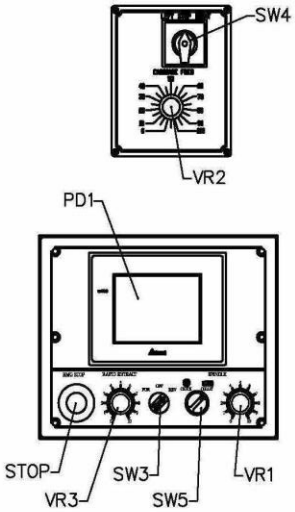

KM1	Spindle motor
KM2	Feed motor
KM3	Coolant pump contactor
IN1	Yaskawa V1000 2.2kw
IN2	Yaskawa V1000 0.4kw
IN3	Panasonic server motor
SW1	Coolant pump switch
SW2	Start
SW3	Motor forward and Reverse switch
SW4	Feed motor switch
SW5	Collet chuck Switch
EMS	Emergency stop switch
STOP	Emergency stop switch
VR1	Spindle speed select knob
VR2	Feed speed select knob
PL1	Power light
PL2	Start light
S1	Start botton
FU1	Fuse
FU2	Fuse
FU3	Fuse
FU4	Fuse
FU5	Fuse
FU6	Fuse
KM1	Spindle contactor
KM2	Coolant pump contactor
KM3	Coolant pump contactor
KA1	Forward/Reverse power relay
KA2	Forward/Reverse power relay
KA3	Feed motor power relay
KA4	Power relay
R1	Spindle motor brake resistor
R2	Feed motor brake resistor
SL1	limit switch
SL2	limit switch
PD1	POD
OL1	Coolant pump over relay
FAN	Fan