JWBS-8-M 8” Band Saw

10000480M ~230V 50Hz

PARTS LIST

JPW (TOOL) AG
Tämperlistrasse 5
CH-8117 Fällanden
Switzerland
Phone +41 44 806 47 48
Fax +41 44 806 47 58
www.jettools.com

P-10000480M 2018-03

Parts Breakdown f-or JWBS-8-M 8” Band Saw

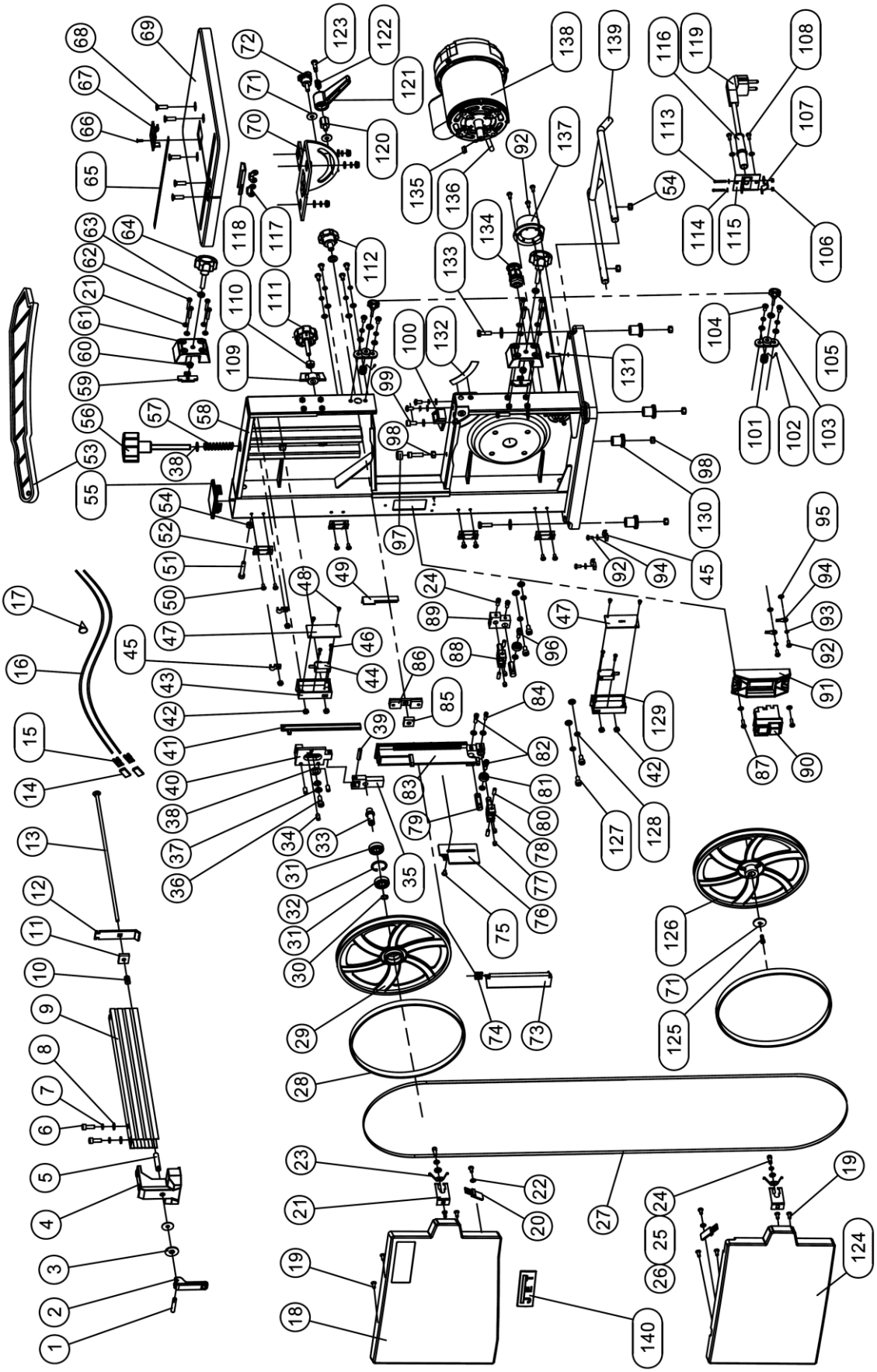

Parts List for JWBS-8-M 8” Wood Band Saw

Index No.	Part No.	Description	Size	Qty.
1	JWBS8-001	Pin	3x8	1
2	JWBS8-002	Clamp handle		1
3	JWBS8-003	Flat Washer	8	3
4	JWBS8-004	Fixed Pressing Paw		1
5	JWBS8-005	Connecting Screw Rod		1
6	JWBS8-006	Hex. Bolt	M6x16	1
7	JWBS8-007	Spring Washer	6	2
8	JWBS8-008	Flat Washer	6	2
9	JWBS8-009	Guide Tube		1
10	JWBS8-010	Spring		1
11	JWBS8-011	Square Washer A		1
12	JWBS8-012	Movable Clamp Paw		2
13	JWBS8-013	Connecting Rod	M4x15	8
14	JWBS8-014	Terminal board cover	6.3	2
15	JWBS8-015	Terminal board	6.3	2
16	JWBS8-016	Cord for Limint Switch		1
17	JWBS8-017	B Terminal		1
18	JWBS8-018	Upper Door		1
19	JWBS8-019	Self-Tapping Screw	ST4.2x9.5	8
20	JWBS8-020	Brush		2
21	JWBS8-021	Door Stop -A		2
22	JWBS8-022	Flat Washer	4	2
23	JWBS8-023	Spring for Door		2
24	JWBS8-024	Socket Head Flat Screw	M5x10	2
25	JWBS8-025	Spring Washer	5	2
26	JWBS8-026	Flat Washer		2
27	JWBS8-027	Blade		1
28	JWBS8-028	Tire		2
29	JWBS8-029	Upper Wheel		1
30	JWBS8-030	Retaining Ring	10	1
31	JWBS8-031	Bearing	6000ZZ	2
32	JWBS8-032	Retaining Ring	26	1
33	JWBS8-033	Shaft for Driven Wheel		1
34	JWBS8-034	Socket Set Screw	M6x8	3
35	JWBS8-035	Moving Block		1
36	JWBS8-036	Screw for Rise		1
37	JWBS8-037	Wave Washer	8	2
38	JWBS8-038	Flat Washer	8	2
39	JWBS8-039	Pin	5x25	1
40	JWBS8-040	Up moving Block		1
41	JWBS8-041	Locking Plate		1
42	JWBS8-042	Hex Nut	M4	6
43	JWBS8-043	Switch Box		1
44	JWBS8-044	Switch		1
45	JWBS8-045	Clamp for cord		1
46	JWBS8-046	Self-Tapping Screw	ST2.9x13	6
47	JWBS8-047	Switch Plate		1
48	JWBS8-048	Self-Tapping Screw	ST2.9x6.5	4
49	JWBS8-049	Lock Plate		1
50	JWBS8-050	Rivet	4x7	8
51	JWBS8-051	Socket Head Flat Screw	M6x20	1
52	JWBS8-052	Door Hinge		4
53	JWBS8-053	Push		1
54	JWBS8-054	Hex Nut	M5	3
55	JWBS8-055	Block		1
56	JWBS8-056	Swelling Knob		1

Index No.	Part No.	Description	Size	Qty.
57	JWBS8-057	Compression Spring		1
58	JWBS8-058	Body		1
59	JWBS8-059	Door Stop -B		2
60	JWBS8-060	Lock Nut	M6	2
61	JWBS8-061	Door Lock Cover		2
62	JWBS8-062	Pan Head Machine Screw	M4x25	8
63	JWBS8-063	Flat Washer	6	2
64	JWBS8-064	Door Lock Knob		2
65	JWBS8-065	Scale at Table		1
66	JWBS8-066	Pan Head Machine Screw	M4x8	1
67	JWBS8-067	Table Inset		1
68	JWBS8-068	Socket Set Screw	M6x20	5
69	JWBS8-069	Table		1
70	JWBS8-070	Mitre Seat		1
71	JWBS8-071	Flat Washer	Ø6.5xØ28x3	3
72	JWBS8-072	Knob		1
73	JWBS8-073	Locking Plate		1
74	JWBS8-074	Spring	M6	4
75	JWBS8-075	Self-Tapping Screw	ST2.9x8	1
76	JWBS8-076	Sliding Plate A		1
77	JWBS8-077	Socket Set Screw	M6x6	6
78	JWBS8-078	Bracket A		1
79	JWBS8-079	Pin		1
80	JWBS8-080	Pin		4
81	JWBS8-081	Bearing	606ZZ	2
82	JWBS8-082	Socket Head Flat Screw	M5x16	2
83	JWBS8-083	Up-down part		1
84	JWBS8-084	Socket Head Flat Screw	M4x12	1
85	JWBS8-085	Sliding Plate A		1
86	JWBS8-086	Sliding Plate B		1
87	JWBS8-087	Pan Head Machine Screw	4x14	2
88	JWBS8-088	Bracket B		1
89	JWBS8-089	Lower Fixed Block		1
90	JWBS8-090	Switch		1
91	JWBS8-091	Switch Base		1
92	JWBS8-092	Pan Head Machine Screw	M4x10	2
93	JWBS8-093	Spring Washer	4	2
94	JWBS8-094	Grounding Terminal		2
95	JWBS8-095	Tooth Washer	4	2
96	JWBS8-096	Socket Head Flat Screw	M6x30	1
97	JWBS8-097	Rubber Cover		1
98	JWBS8-098	Hex. Nut	M6	5
99	JWBS8-099	Socket Head Flat Screw	M6x12	1
100	JWBS8-100	Lower Blade Guard		1
101	JWBS8-101	Gear		1
102	JWBS8-102	Socket Set Screw	M3x5	1
103	JWBS8-103	Loacting Sleeve A		1
104	JWBS8-104	Pan Head Machine Screw	M5x10	2
105	JWBS8-105	Door Lock Knob		2
106	JWBS8-106	Hex Nut	M3	2
107	JWBS8-107	Cord Clip		1
108	JWBS8-108	Pan Head Machine Screw	M4x10	2
109	JWBS8-109	Wing Nut		1
110	JWBS8-110	Hex Nut	M8	1

Index No.	Part No.	Description	Size	Qty.
111	JWBS8-111	Knob		1
112	JWBS8-112	Lock knob		1
113	JWBS8-113	Pan Head Machine Screw	M3x20	2
114	JWBS8-114	Flat Washer	3	2
115	JWBS8-115	Fixed Plate Assembly		1
116	JWBS8-116	Protecting Brush		1
117	JWBS8-117	Wing Nut	M6	2
118	JWBS8-118	Plate		1
119	JWBS8-119	Power Cord		1
120	JWBS8-120	Set Screw		1
121	JWBS8-121	Lock Handle		1
122	JWBS8-122	Spring		1
123	JWBS8-123	Screw		1
124	JWBS8-124	Lower Door		1
125	JWBS8-125	Socket Head Flat Screw	M6x16-Left	1
126	JWBS8-126	Lower Wheel		1
127	JWBS8-127	Socket Head Flat Screw	M8x16	4
128	JWBS8-128	Spring Washer	8	4
129	JWBS8-129	Limit Switch Box		1
130	JWBS8-130	Footing		4
131	JWBS8-131	Pan Head Machine Screw	M5x20	2
132	JWBS8-132	Scale for Table Tilt		1
133	JWBS8-133	Hex Cap Screw	M6x20	4
134	JWBS8-134	Clip		1
135	JWBS8-135	Key	5x16	1
136	JWBS8-136	Motor cord		1
137	JWBS8-137	Dust Outlet		1
138	JWBS8-138	Motor	230V 250W	1
	JWBS8-138MF	Motor Fan (not shown)		1
	JWBS8-138RCE	Running Capacitor (not shown)	8μF, 450V	1
	JWBS8-138JB	Junction Box (not shown)		1
	JWBS8-138JBC	Junction Box Cover (not shown)		1
	JWBS8-138MC	Motor Cover (not shown)		1
139	JWBS8-139	Supporting		1
140	JET-92	JET LOGO		1
		ID Label, JWBS-8 (not shown)		1
		Motor Label, JWBS-8 (not shown)		1
		Warning Label, JWBS-8 (not shown)		1
		Hex wrench (not shown)	3mm	1
		Hex wrench (not shown)	4mm	1
		Hex wrench (not shown)	5mm	1

Wiring Diagram for JWBS-8-M 8” Band Saw

10000480M…….….. ~ 230V, 50Hz

	colour of strands	Litzenfarben	couleur des cordons
BK	black	schwarz	noir
WH	white	weiß	blanc
BU	blue	blau	bleu
YE	yellow	gelb	jaune
RD	red	rot	rouge
BN	brown	braun	brun
GY	grey	grau	gris
GNYE	green-yellow	grün-gelb	vert-jaune
OG	orange	orange	orange
VT	violet	violett	violet
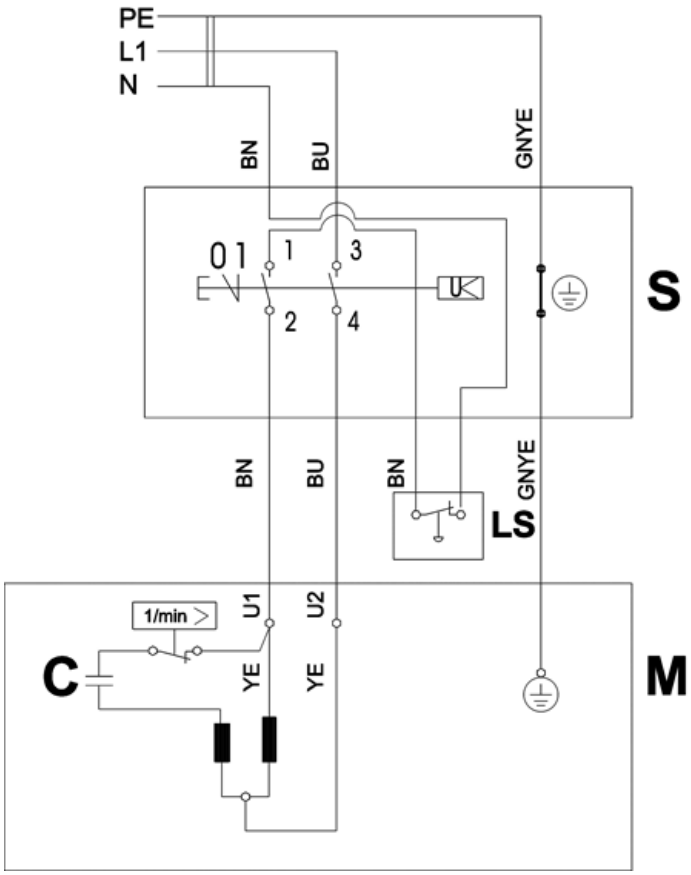
	meaning of symbol	Bedeutung der Zeichen	interprétation
M	motor	Motor	moteur
S	switch	Schalter	interrupteur
C	condenser	Kondensator	condensateur
E	electronic unit	Elektronik Einheit	unité électronique
F	fuse	Sicherung	fusible
RS	reversing switch	Drehrichtungsschalter	commu. droite/gauche
S	centrifugal switch	Fliehkraftschalter	déclencheur centrifuge
OL	overload cut-off	Überlastschutzschalter	déclencheur surcharge
LS	limit switch	Positionsendschalter	micro