MBS-708CSB Metal Bandsaw

Original:

GB
Operating Instructions

JPW (Tool) AG

Tämperlistrasse 5
CH-8117 Fällanden
Switzerland
Phone +41 44 806 47 48
Fax +41 44 806 47 58
www.jettools.com

M-50000316M 2018-01

CE-Conformity Declaration
CE-Konformitätserklärung
Déclaration de Conformité CE

Product / Produkt / Produit:
Metal Band Saw / Metallbandsäge / Scie à ruban

MBS-708CSB

Brand / Marke / Marque:

JET

Manufacturer / Hersteller / Fabricant:
JPW (Tool) AG, Tämperlistrasse 5, CH-8117 Fällanden
Schweiz / Suisse / Switzerland

We hereby declare that this product complies with the regulations
Wir erklären hiermit, dass dieses Produkt der folgenden Richtlinie entspricht
Par la présente, nous déclarons que ce produit correspond aux directives suivantes

2006/42/EC
Machinery Directive / Maschinenrichtlinie / Directive Machines

2014/30/EU
electromagnetic compatibility
elektromagnetische Verträglichkeit
compatibilité électromagnétique

designed in consideration of the standards
und entsprechend folgender zusätzlicher Normen entwickelt wurde
et été développé dans le respect des normes complémentaires suivantes

EN ISO 12100:2010

EN 13898:2003+A1:2009

EN 60204-1:2006/AC2010

EN 61000-6-2:2005

EN 61000-6-4:2007/A1:2011

Responsible for the Documentation / Dokumentations-Verantwortung / Résponsabilité de Documentation:

Hansjörg Meier

Head Product-Mgmt. / Leiter Produkt-Mgmt. / Resp. Gestion des Produits
JPW (Tool) AG

2017-10-13 Jan Dätwyler, General Manager

JPW (Tool) AG, Tämperlistrasse 5, CH-8117 Fällanden
Schweiz / Suisse / Switzerland

Table of Contents

Warnings

1. Read and understand the entire owner's manual before attempting assembly or operation.
2. Read and understand the warnings posted on the machine and in this manual. Failure to comply with all of these warnings may cause serious injury.
3. Replace the warning labels if they become obscured or removed.
4. This band saw is designed and intended for use by properly trained and experienced personnel only. If you are not familiar with the proper and safe operation of a band saw, do not use until proper training and knowledge have been obtained.
5. Do not use this band saw for other than its intended use. If used for other purposes, JPW (TOOLS) Inc., disclaims any real or implied warranty and holds itself harmless from any injury that may result from that use.
6. Always wear approved safety glasses/face shields while using this band saw. Everyday eyeglasses only have impact resistant lenses; they are not safety glasses.
7. Before operating this band saw, remove tie, rings, watches and other jewelry, and roll sleeves up past the elbows. Remove all loose clothing and confine long hair. Non-slip footwear or anti-skid floor strips are recommended. Do **not** wear gloves.
8. Wear ear protectors (plugs or muffs) during extended periods of operation.
9. Some dust created by power sanding, sawing, grinding, drilling and other construction activities contain chemicals known to cause cancer, birth defects or other reproductive harm. Some examples of these chemicals are:
   - Lead from lead based paint.
   - Crystalline silica from bricks, cement and other masonry products.
   - Arsenic and chromium from chemically treated lumber.

   Your risk of exposure varies, depending on how often you do this type of work. To reduce your exposure to these chemicals, work in a well-ventilated area and work with approved safety equipment, such as face or dust masks that are specifically designed to filter out microscopic particles.
10. Do not operate this machine while tired or under the influence of drugs, alcohol or any medication.
11. Make certain the switch is in the **OFF** position before connecting the machine to the power supply.
12. Make certain the machine is properly grounded.
13. Make all machine adjustments or maintenance with the machine unplugged from the power source.
14. Remove adjusting keys and wrenches. Form a habit of checking to see that keys and adjusting wrenches are removed from the machine before turning it on.
15. Keep safety guards in place at all times when the machine is in use. If removed for maintenance purposes, use extreme caution and replace the guards immediately.
16. Check damaged parts. Before further use of the machine, a guard or other part that is damaged should be carefully checked to determine that it will operate properly and perform its intended function. Check for alignment of moving parts, binding of moving parts, breakage of parts, mounting and any other conditions that may affect its operation. A guard or other part that is damaged should be properly repaired or replaced.
17. Provide for adequate space surrounding work area and non-glare, overhead lighting.
18. Keep the floor around the machine clean and free of scrap material, oil and grease.
19. Keep visitors a safe distance from the work area. **Keep children away.**
20. Make your workshop child proof with padlocks, master switches or by removing starter keys.
21. Give your work undivided attention. Looking around, carrying on a conversation and “horse-play” are careless acts that can result in serious injury.

22. Maintain a balanced stance at all times so that you do not fall or lean against the blade or other moving parts. Do not overreach or use excessive force to perform any machine operation.
23. Use the right tool at the correct speed and feed rate. Do not force a tool or attachment to do a job for which it was not designed. The right tool will do the job better and safer.
24. Use recommended accessories; improper accessories may be hazardous.
25. Maintain tools with care. Keep blades sharp and clean for the best and safest performance. Follow instructions for lubricating and changing accessories.
26. Make sure the work piece is securely clamped in the vise. Never use your hand to hold the work piece.
27. Turn off the machine before cleaning. Use a brush or compressed air to remove chips or debris — do not use your hands.
28. Do not stand on the machine. Serious injury could occur if the machine tips over.
29. Never leave the machine running unattended. Turn the power off and do not leave the machine until the blade comes to a complete stop.
30. Remove loose items and unnecessary work pieces from the area before starting the machine.
31. Pull the mains plug if the machine is not in use.

Familiarize yourself with the following safety notices used in this manual:

⚠CAUTION This means that if precautions are not heeded, it may result in minor injury and/or possible machine damage.

⚠WARNING This means that if precautions are not heeded, it may result in serious injury or possibly even death.

SPECIFICATIONS

Model	MBS-708CSB
Stock Number	50000316M
Round at 90° (mm)	180
Round at Right 45° (mm)	125
Round at Left 45° (mm)	140
Round at 60° (mm)	95
Rectangle at 90° (mm)	165 x 220
Rectangle at Right 45° (mm)	150 x 70
Rectangle at Left 45° (mm)	135 x 150
Rectangle at 60° (mm)	90 x 95
Blade Size (mm)	19 x 0.9 x 2285
Blade Tension (kg/cm^2)	1500~1700
Blade material	HSS M42 5/8T
Blade Speeds (MPM)	35 ~ 85
Blade Wheel Diameter (mm)	250
Coolant Capacity (Liter)	10
Bed Height (mm)	920
Motor (DC Brushless)	0.75kW, 230V, 1Ph
Floor Space Required (L x W x H) (mm)	1140 x 562 x 1295
Machine Package (mm)	1250 x 580 x 912
Net Weight (kg)	120
Gross Weight (kg)	145

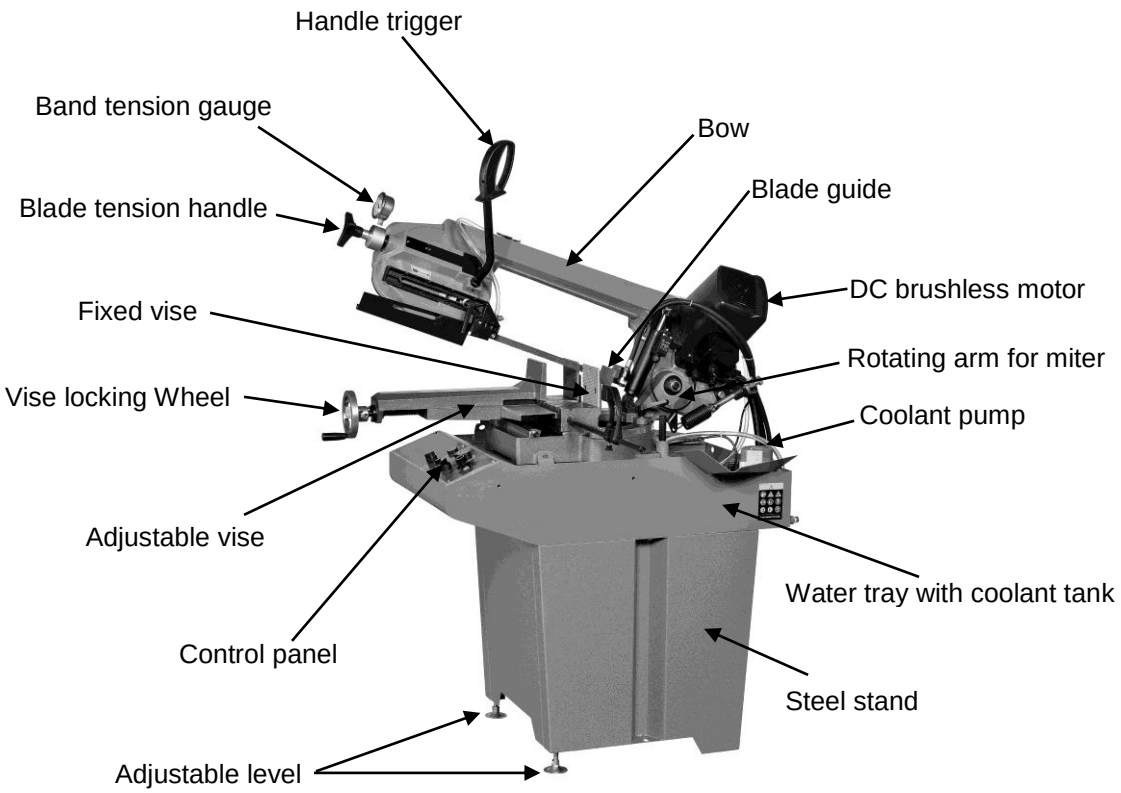

SHIPPING CONTENT

⚠WARNING

Read and understand the entire contents of this manual before attempting assembly or operation! Failure to comply may cause serious injury.

Unpacking

Remove box and wood crating completely from around saw. Check for shipping damage. Report any damage immediately to your distributor and shipping agent. Do not discard any shipping material until the Table Saw is assembled and running properly.

Compare the contents of your container with the parts lists in the next page to make sure all parts are intact. Missing parts, if any, should be reported to your distributor. Read the instruction manual thoroughly for assembly, maintenance and safety instructions.

1. Unbolt the saw from the skid.
2. Carefully slide the saw from the pallet onto the floor.

⚠WARNING

Do not connect the saw to the power source until all assembly has been completed! Failure to comply may cause serious injury!

The Metal Saw should be placed in an area with a sturdy level floor, good ventilation and sufficient lighting. Leave enough space around the machine for mounting extension trays and bow swivel, and loading and off-loading stock and general maintenance work.

Cleaning

Exposed metal surfaces, such as the table top and moveable vise sliding area, have been given a protective coating at the factory. This should be removed with a soft cloth moistened with kerosene. Do not use acetone, gasoline, or lacquer thinner for this purpose. Do not use solvents on plastic parts, and do not use an abrasive pad because it may scratch the surfaces.

Prior to operation

1. Check to see blade tooth direction matches diagram on saw body.
2. Check to see that blade is properly seated on wheels after proper tension has been applied.
3. Set blade guide roller bearing snug against blade. See Adjusting Blade Guide Bearings for more details.
4. Check for slight clearance between vertical rollers and back of blade.
5. Position movable blade guide as close to work as possible.
6. Select proper speed and feed rate for materials being cut.
7. Material to be cut must be held securely in vise.
8. Do not start cut on a sharp edge. File the edge first.

Set-Up and Assembly

Stand

Referring to Figure 1.

1 Band Saw (not shown)
1 Front Stand Panel (A)
1 Rear Stand Panel (B)
1 Left Stand Panel (C)
1 Right Stand Panel (D)
1 Extension Water Tray for Front (E)
1 Extension Water Tray for Rear (F)
1 Operating Instructions manual (not shown)

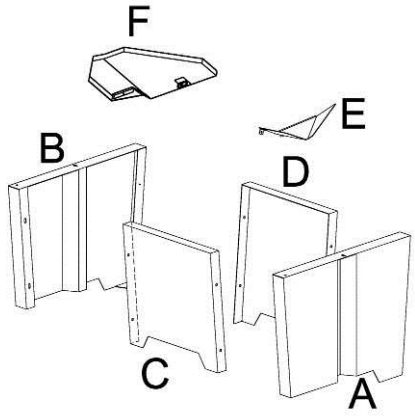

Contents of the Carton (Fig 1)

Hardware

Referring to Figure 2.

8 M8 x 15 Hex Head Cap Screw (G)
8 5/16" Flat Washer (H)
8 M8 Hex Nut (J)
2 Adjustment Pad w/ Hex nut (K)

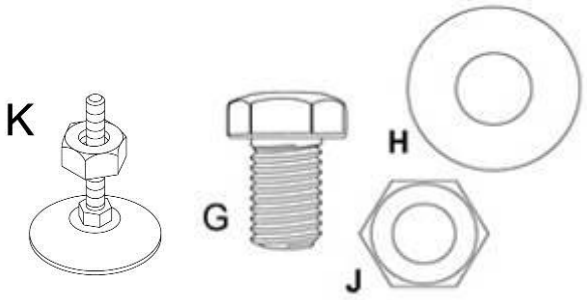

Hardware (Fig 2)

Machine Features

Referring to Figure 3.

It depicts the main features of the Model MBS-708CSB Bandsaw. The machine consists of a machine base onto which is installed a saw head.

Saw Head

The saw head consists of a drive motor, gearbox, blade wheels, blade guides and supports, control panel, blade tension mechanism, wire brush, and the saw blade.

The drive wheel is installed on the output shaft of the gearbox. The driven wheel is located on the left side of the machine and is mounted on a shaft that is part of the blade tension mechanism. The blade tension mechanism is used to tighten the saw blade on the blade wheels.

Blade tension generally requires adjustment only after the saw blade is changed, but the tension should be monitored with the convenient blade tension indicator.

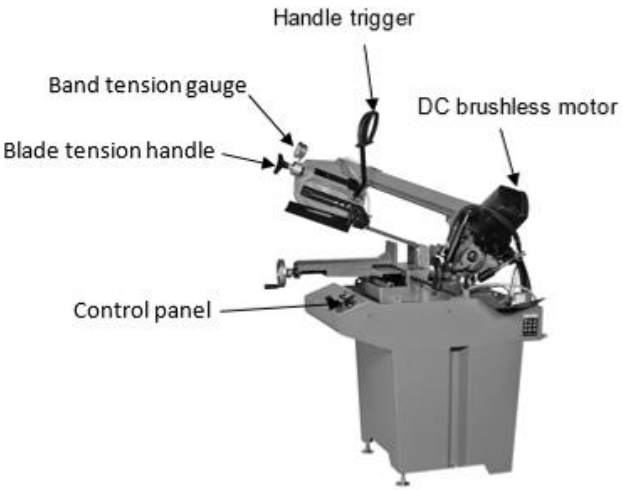

Fig 3

Work Stop

Referring to Figure 4.

A work-stop is provided with the machine to allow cutting multiple pieces of identical length. The stop consists of a set rod onto which is installed a distance set bracket, stop rod assembly and two lock handles. The rod is installed in a bore in the front of the saw bed. The distance set bracket is moved in or out on the set rod to establish the length of the work-piece and the stop rod can be adjusted to accommodate work-pieces of various widths.

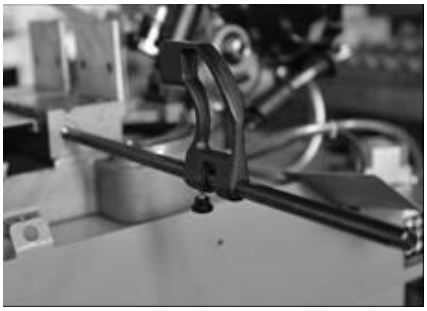

Fig. 4

Stand Assembly

Referring to Figure 5.

Tools required for assembly:

Two 13mm wrenches (**Note:** A ratchet wrench may speed assembly time.)

1. Assemble the *rear* (D_1) and *right side* (E_1) *panels* with two M8 x 15 *hex cap screws* (A), two 5/16" *flat washers* (B) and two M8 *hex nuts* (C). Tighten the hex nuts.
2. Assemble E_2 and D_2 in the same manner.
3. Assemble the level pad (G) and hex nut (F) in stand.
4. Finish assembling E_2 to D_1 and E_1 to D_2 in the same manner as above.

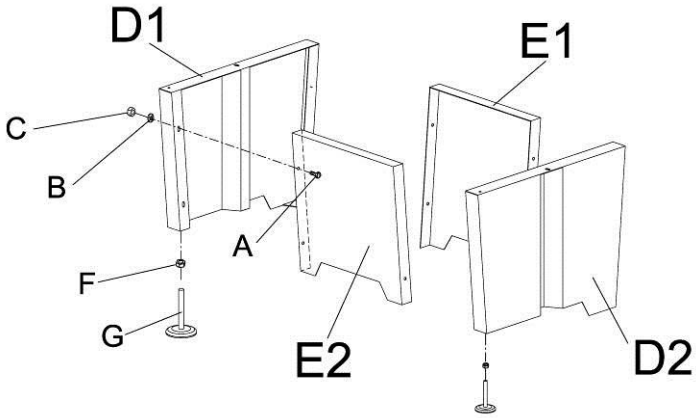

Assembly (Fig 5)

Mounting Saw to Stand

Remove any plastic or holding straps from around the band saw. Areas of the machine have been given a protective coating at the factory. This should be removed using a soft cloth moistened with kerosene or a cleaner-degreaser. Do not use gasoline, paint thinner, or lacquer thinner as these will damage painted surfaces. Do not use an abrasive pad.

Determine the final location for the saw and allow for a sufficient work space around it.

⚠CAUTION The saw is extremely heavy. Use a hoist to lift.

⚠CAUTION When moving the saw/stand top assembly the cutting head, or "bow", should be in the down position.

Referring to Figure 6:

1. The *saw* (A) and *stand top* (B) come as an assembled unit. Use a hoist to lift and place the saw onto the *stand* (C).

   Note that the *front* of the saw faces the same direction as the *indented panel* of the stand.

2. Adjust the *stand top* (B) and *stand* (C) so the corner mounting holes (D) are aligned.

3. Secure the *stand top* (B) to the stand (C) with four each M8 *hex cap screws* (E) with M8 *flat washers* (F). Tighten with a 13mm hex wrench.

Install the extension trays

Refer to Fig 7.

Install the coolant collectors (R) at the left and right side of the base.

Machine Base

Referring to Fig 8.

The base is a structure supporting the saw frame, the vise, the bar stop, the work-piece supporter, coolant pump, swing arm, and the coolant return plates. The base house includes the cooling liquid tank.

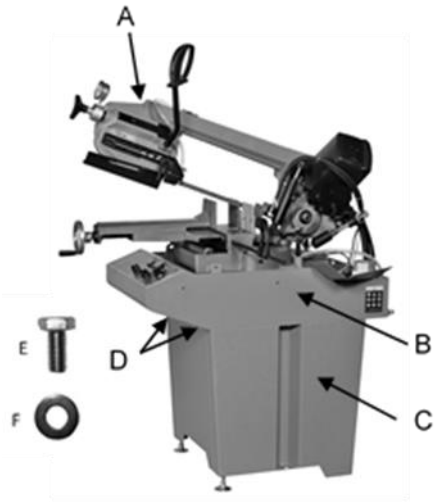

Assembly (Fig 6)

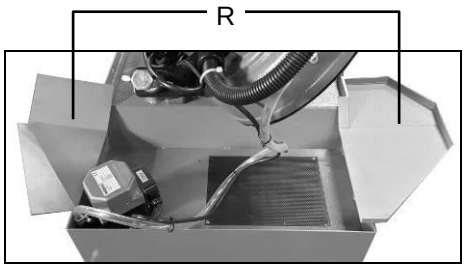

Fig. 7

Fig. 8

Coolant System

Referring to Fig 9.

Oils for Lubricating Coolant
Considering the vast range of products on the market, the user can choose the one most suited to their own requirements, using as reference the type SHELL LUTEM OIL ECO. THE MINIMUM PERCENTAGE OF OIL DILUTED IN WATER IS 10 - 20 %.

Cleaning the Tan
Use hex wrench to open the plug located on the rear base below the pump. Allow the coolant to drain-out.
Remove the filter net (P) by loosening the four screws.
Remove the pump (Q) by loosening the four screws.
Use a vacuum cleaner to vacuum chips and debris from the tank.
Replace the plug.
Thoroughly clean the pump (Q) and replace.
Fill the tank with coolant to approximately 25mm below the filter net (P).
Clean and replace the filter net.

Operating controls

Operation of Control Panel

Referring to Fig 10.

1. **Emergency stop switch**
   Press down the Emergency switch to stop all of machine function if any unsafely situation occurred.
2. **Stop power button**
   O: Press to disconnect the power of motor.
3. **Power on button**
   I: Press to connect the power of motor
4. **Blade speed adjusting knob**
   Variable blade speed is controlled by the knob. Turn knob clockwise to increase speed from 35 to 85 MPM. Turn knob counter clockwise to decrease blade speed.
5. **Cutting mode selection Switch**
   There is two cutting modes and neutral position can be selected. Select any cutting mode the power should be cut by the neutral position.
   Manual mode.

   

   Hydraulic flow controlled descend mode.

   

   Turn switch left for hydraulic controlled descend mode and right for manual mode.

6. **Coolant ON/OFF Switch**
   I: Turn on the coolant
   O: Turn off the coolant
7. **Saw Arm Descend Valve**
   Control saw bow descent speed

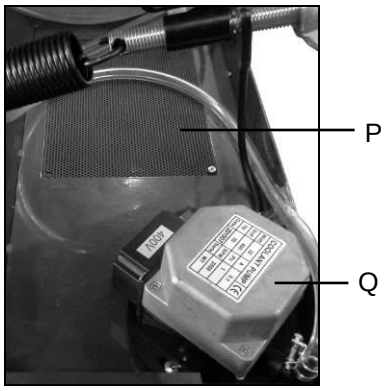

Fig. 9

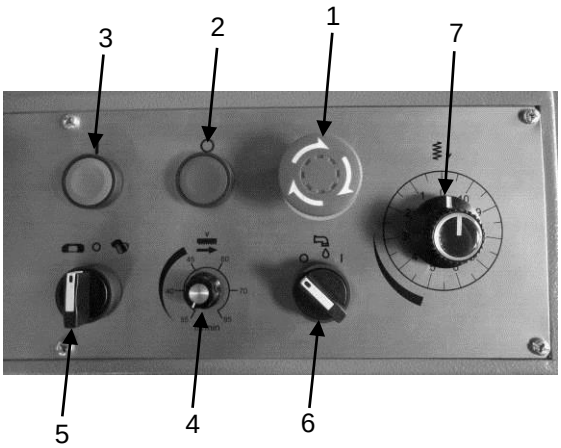

Fig. 10

Operation

Spring Setting

Referring to Fig 11.

Counterbalance spring
The counterbalance spring helps control the amount of weight the saw bow puts on the work-piece when the hydraulic control valve is fully open. The hydraulic cylinder will not compensate for improper counterbalance.
If the spring is not set properly, one can expect poor performance, crooked cuts, tooth stripping, stalling, and/or the blade running off the wheels.
Spring tension has been set by the manufacturer, and should not require adjustment. If future problems arise, indicating improper counterbalance, adjust spring as follows:

1. Disconnect machine from power source.
2. Turn ON hydraulic cylinder valve and place saw bow in horizontal position.
3. Turn feed rate valve on hydraulic cylinder counterclockwise until it stops.
4. Place a weigh scale (such as a spring or hanging scale) beneath blade tension handle, and lift saw bow. Scale should indicate approximately 5 to 6 kg (11-13 LB).
5. If adjustment is needed, loosen wing nut A on the eye bolt, until scale indicates 5 to 6 kg (11-13 LB).

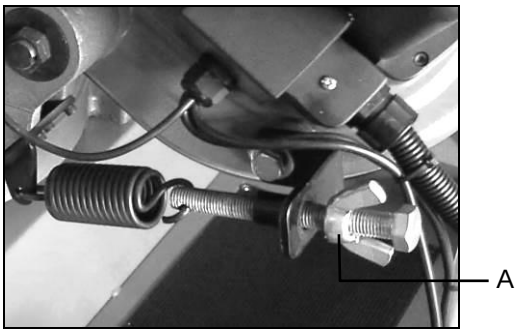

Fig. 11

General operating procedure

Referring to Fig 12.

1. Raise bow until it will clear work-piece by a few inches, and close hydraulic cylinder valve to secure it in place.
   NOTE: Never start a cut with blade contacting work-piece.
2. Place work-piece in vise and tighten vise. The work-piece should be fitted directly between the jaws without adding other objects.
   When work-piece to be cut is a profiled section, flat piece or special shape, refer to examples in Figure 29 for proper clamping positions. The top row shows acceptable clamping positions; the bottom row shows unacceptable positions.
   If thickness of profiled section is very thin, a piece which duplicates the profile should be fitted inside the work-piece itself, to prevent work-piece being crushed between the jaws.

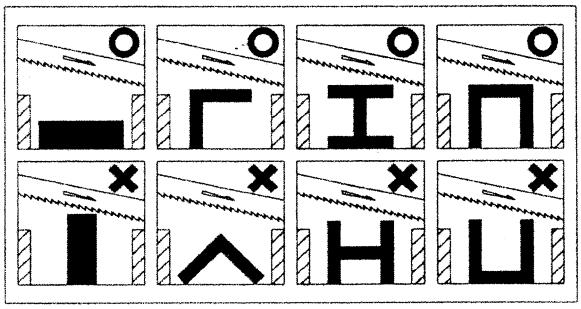
Fig. 12

Adjustments

Adjusting movable Blade Guide

Refer to Fig 13.

⚠WARNING Red blade guard must be reinstalled after new blade is fitted.

1. Disconnect machine from the power source.
2. Loosen lock handle A and knob B. Slide blade guide assemblies as close as possible to the material for cutting stably.
3. Tighten handle A and knob B after adjusting.

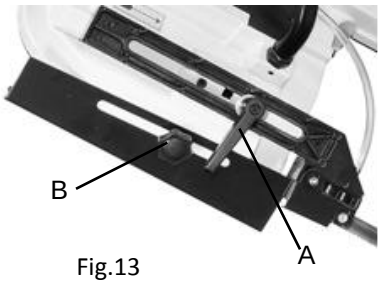

Fig.13

Vise Operation

Refer to Fig 14.

⚠WARNING Do not make any adjustments or load/unload material from vise while machine is running! Failure to comply may cause serious injury!

The vise is mounted on the machine base. Follow the easy steps to open or close the vise.

1. Turn the hand wheel (A) Fig.14 counter clockwise to open the vise jaw to allow the width of vise can load work piece.
2. Make sure the work piece is well located on the table. Turn the handle (A) clockwise to close the vise jaw to clamp the work piece. Sure the work piece is well located on the table. Turn the handle (A) clockwise to close the vise jaw to clamp the work piece.

Fig. 14

Adjusting Blade Tension

Refer to Fig 15.

Blade tension is important to the proper operation of the saw. This saw proper blade tension is in 1500 to 1700kg/cm^2 as measured on blade tension gauge.

To set the blade tension without the use of a blade tension gauge:

1. Disconnect machine power, open wheel covers to install blade belt between wheels and insert blade between bearings on blade guides.
2. Tension blade slightly to remove any sag in blade between blade wheels.
3. Turn blade tension knob (A) clockwise to tighten until the red line approach to central line (B).
4. After blade has been completely installed, close wheel covers, connect to the power source, and run saw for one minute so blade can seat properly.

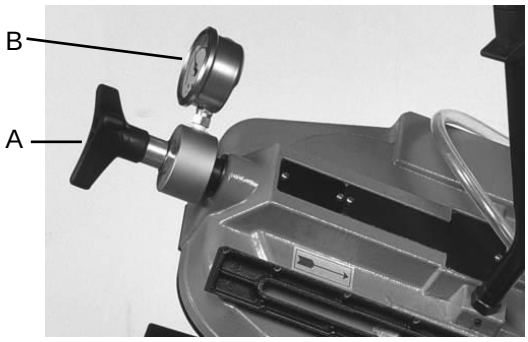

Fig. 15

Blade installation/replacement

⚠WARNING

Disconnect the cut-off saw from its electrical power source.

Refer to Fig 16 and 17.

1. Disconnect machine from the power source.
2. Raise saw bow to proper position and lock in place by turning hydraulic valve switch off.
3. Remove saw bow cover (A, Fig. 16) by removing six screws (B).
4. Loose blade guard nuts and screws (C, Fig. 17). Remove right and left two blade guards.
5. Loosen blade tension by turning blade tension knob (D) counter-clockwise.
6. Carefully remove old blade. Caution: blade teeth are sharp. Handle with care.
7. Install new blade (E) by placing blade between blade guides (F) first. Make sure blade teeth face the same direction as indicated on the label found on the saw bow.
8. Place blade around both wheels. Make sure the blade back edge rests near the wheel flange on both wheels.
9. Turn blade tension knob clockwise to tension blade to tighten until the red line approach to central line (B, Fig. 15). Do not over tension.
10. Put on the blade guards and tighten blade guard nuts and screws back.
11. Close blade wheel cover and secure with lock screws.
12. Install red blade guard, and brush assembly.
13. Connect machine to the power source.
14. Run saw and make sure blade is tracking properly.

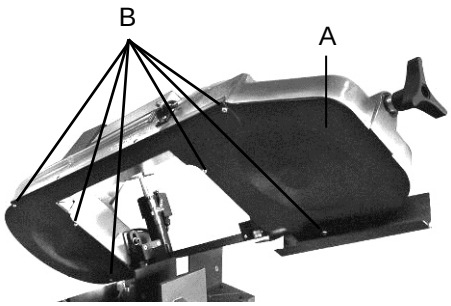

Fig. 16

⚠WARNING **Use leather gloves when changing the saw blade to protect your hands from cuts and scratches. Use protective eye wear that meets locate codes.**

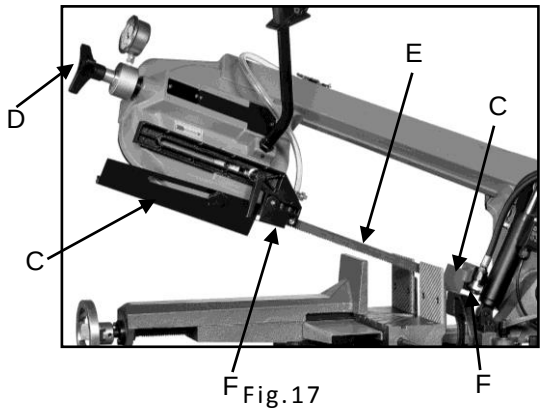

Fig.17

Test cutting to verify adjustment

Test cuts can be used to determine whether or not you have adjusted the blade accurately. Use 2-inch round bar stock to perform these test cuts, as follows:

1. With bar stock securely clamped in the vise, make a cut through the bar stock. (See Figure 18.)
2. Mark the top of the bar stock.
3. Move the bar stock about 1/4-inch past the blade so that you can begin a second cut.
4. Rotate the bar stock 180 degrees so the mark you made is now at the bottom of the cut.
5. Make a cut through the bar stock.
6. Use a micrometer to measure the thickness variation of the disk you have cut from the bar stock. Measure at top and bottom of disk.

The saw blade can be considered correctly adjusted when the variation measure is no more than 0.012 inch across the face of the disk.

If you do not have a piece of 2-inch bar stock available for a test cut, use a larger diameter test piece rather than a smaller one. The maximum thickness variation on any test piece should be no more than 0.003 inch, per side, per inch of stock diameter.

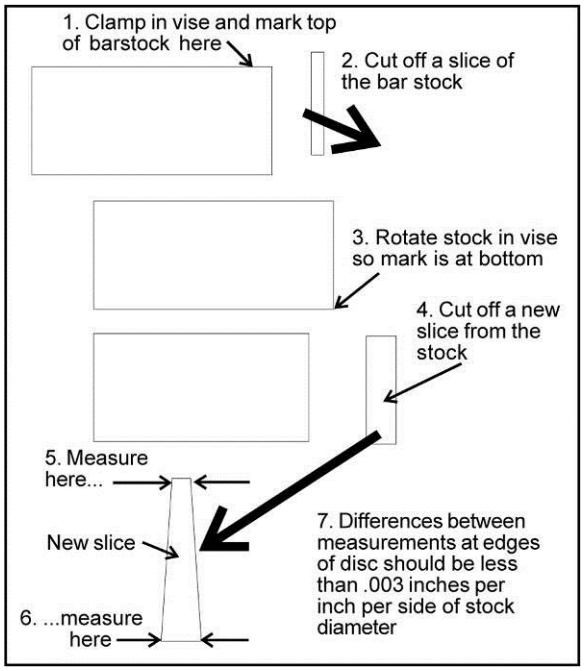

Fig 18.

Adjusting Blade Square to table

Refer to Fig 19.

The settings on your band saw, such as blade squareness and tracking, were carefully performed by the manufacturer. You should, however, verify these before operating, in case misalignment has occurred during shipping.

1. Disconnect machine from the power source.
2. Place machinist's square on the table next to the blade as in Figure 19.
3. Check to see blade makes contact with the square along the entire width of the blade.
4. If adjustment is necessary, loosen bolt (A, Fig. 19) and rotate blade guide assemblies slightly in the same direction until blade makes contact with the square along its entire width.
5. Tighten bolt (Fig. 19).
6. Connect machine to the power source.

NOTE: If adjustment of squaring blade to table was necessary, re-verify all other blade adjustments.

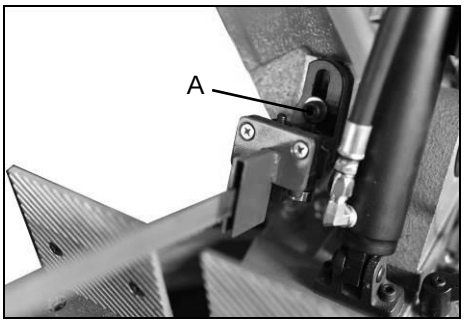

Fig. 19

Adjusting Blade Square to Vise

Refer to Fig. 20/21

Squaring blade to vise

1. Disconnect machine from the power source.
2. Place a machinist's square as pictured in (A, Fig. 20) square should lie along entire length of vise and blade without a gap.
3. If adjustment is necessary, loosen saw frame lock bolts and swiveling saw frame to match with vise square so that square lines up properly. Tighten lock bolts.
4. Retighten the lock handle. (B, Fig. 21)
5. Connect machine to the power source.

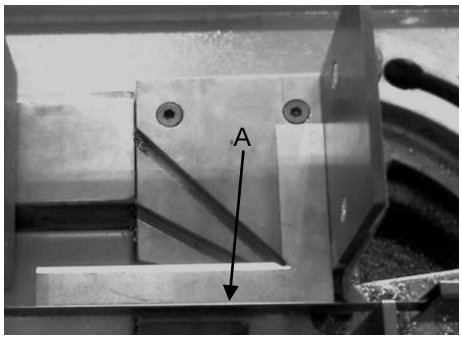

Fig. 20

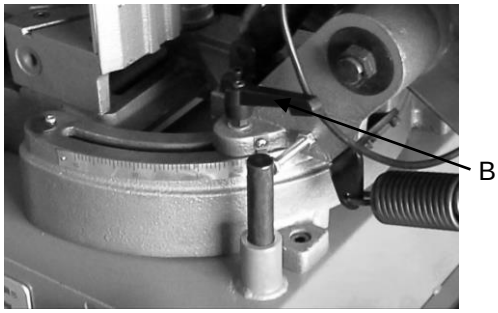

Fig. 21

Adjusting Blade Tracking

Note: Before making any tracking adjustments, try a new blade. Warped blades do not track well.

Blade tracking has been set at the factory and should not require adjustment. If a tracking problem occurs, adjust the machine as follows:

Refer to Fig 22 / 23.

1. Move saw bow to proper height position and lock in place by shutting off the hydraulic cylinder valve.
2. Confirm that blade tension is set properly. To adjust, see section titled Adjusting Blade Tension.
3. Open back wheel cover by loosening lock screws.
4. Run saw and observe blade. Blade should run next to but not tightly against wheel flange.
5. If need to adjust blade track, remove the screws of cover (A, Fig. 22).
6. Loosen bolts (B, Fig. 23) a little bit.
7. Turn setscrew (C, Fig. 23) while observing blade tracking on wheel. Turn setscrew (C) clockwise to track blade closer to the wheel flange. Turn set screw counter-clockwise to track blade away from the wheel flange.
8. Once tracking is set, tighten bolts (B).
9. Recovery the cover (A).

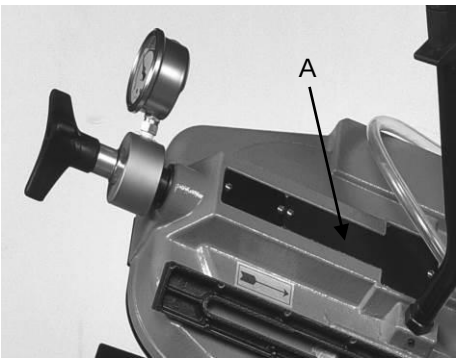

Fig. 22

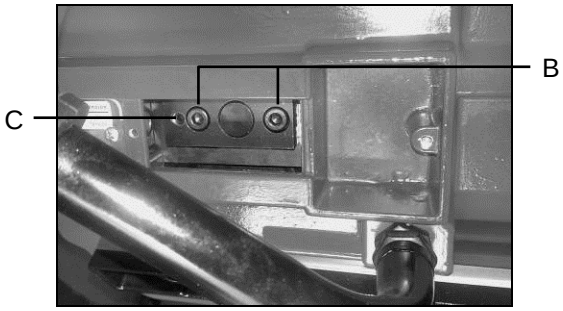

Fig. 23

Adjusting Bow Angle for miter cuts

Refer to Fig 24/25.

For miter cutting, it needs to swivel saw frame to desired angle. The cutting angle for this machine is 0 ~ 60° on the left side, 0~45° on the right side.
There is a bar (A) for frame to stop at zero position on right side swiveling moving, if need to cut in the left side that have to pull out the zero position lock bar (A) then swivel frame to set desired angle at the left cutting. Loosen the frame tighten lock handle (B) and wing nut (D) at the other side before swiveling.

Swiveling saw frame and seat to desired angle which indicated with angle scale (C). Then Tighten handle screw and wing nut eventually.

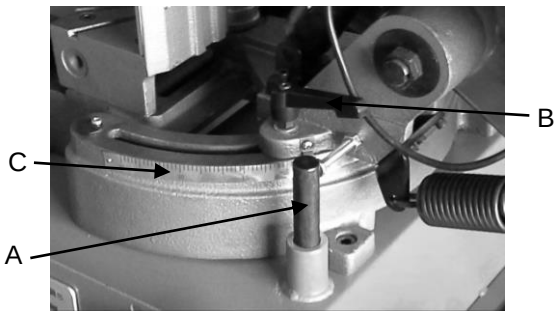

Fig. 24

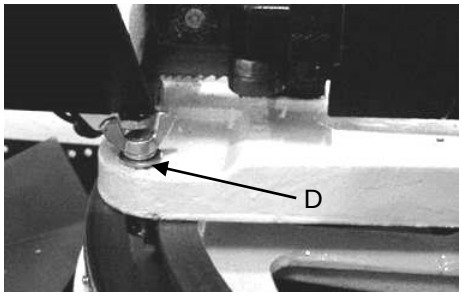

Fig. 25

When you doing the left side angle cutting (0 ~ -45). You need to move the vise forward, in the meanwhile, take the part to the back of the vise.

Refer to Fig. 26/27/28/29/30.

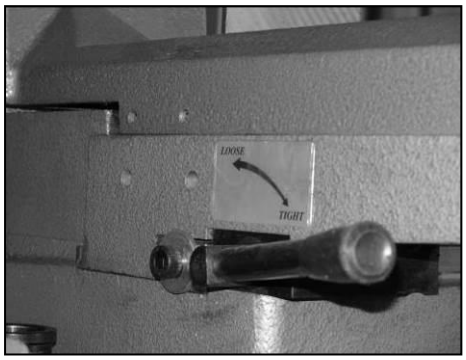

Fig. 26

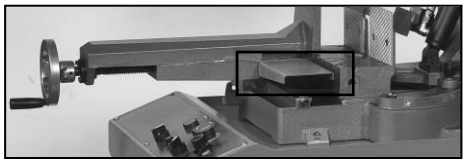

Fig. 27

Fig. 28

Fig. 29

Fig. 30

Adjusting Blade Guide Bearings

⚠CAUTION

This band saw is designed for use with blades that are 19mm wide by 0.9mm thick x 2285mm long. Use of blades with different specification may cause inferior performance.

Refer to Fig 31.

1. Disconnect machine from the power source.
2. Raise arm up to proper position and lock in place by turning off the hydraulic cylinder valve.
3. Loosen hex cap screw (A) and adjust assembly so that back roller bearing is approximately 0.08mm-0.12mm from the back of the blade.
4. Turn nut (B) to adjust eccentric bearing shaft to the blade (the other side bearing shaft is fixed). Blade should still move up and down freely when grasped. Warning! Make sure power is disconnected and hands are protected before handling blade. Be sure that blade teeth do not interfere with the roller bearings.
5. Connect machine to the power source.

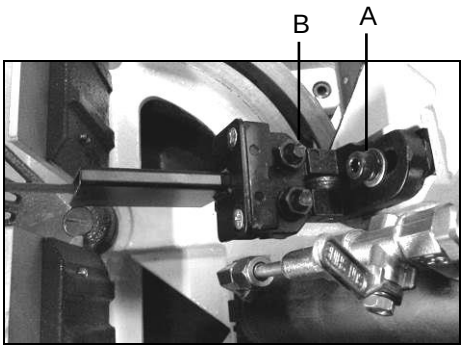

Fig. 31

Selecting the Blade

Refer to Fig 32.

⚠CAUTION **This band saw is designed for use with blades that are 19mm wide by 0.9mm thick x 2285mm long. Use of blades with different specification may cause inferior performance.**

Refer to the section on selecting the blade.

1. A general- use high speed steel blade in furnished with this metal cutting band saw.
2. Never use a blade so coarse that less than 3 teeth are engaged in the work piece at any time. (Too few teeth will cause teeth to strip out.)
3. Never use a blade finer then required obtaining a satisfactory surface finish or satisfactory flatness.

(Too many teeth engaged in the work piece will prevent attainment of a satisfactory sawing rate; frequently cause premature blade wearing; frequently produce "dished" cuts or the cuts are neither square nor parallel.)

4. The chart is not expected to be correct for all cases. It is intended as a general guide to good sawing practices. Your blade supplier or qualified engineers should be you most reliable source for correct information on operational details of saw blades and their use.

Note:

1. When cutting a thin walled pipe, angle steel, and I-beam steel use a blade with 5/8 TPI.
2. Cutting pipe with 1/2" or more wall thickness uses a blade with 5/8 TPI or 4/6 TPI.
3. When cutting angle steel, H-beam, or solid bar material, cut the thinnest cross section of the material first. There must be at least 3 teeth cutting the material at all times.

Blade Speeds

When user operates band saw always change the blade speed to best suit the material being cut.

Refer to Fig 33.

Adjust the blade speed while the machine is running. Controls the variable speeds between 35-85 MPM, turn the speed control knob to get desired speed for cutting the work piece, below is blade speed chart for cutting reference.

Cutting Material / Sawblade	○	⊢ L	● ■	● ■	● ▬	● ▬
	<3mm	<5mm	>50mm	>100mm	>150mm	>200mm
	<0.12"	<0.2"	>2"	>4"	>6"	>8"
(HSS) 14T	●					
(HSS) 6/10T		●				
(HSS) 5/8T			●			
(HSS) 4/6T			●	●		
(HSS) 3/4T				●		
(HSS) 2/3T					●	●
(HSS) 1/2T						●
(HCS) 10T	●					
(HCS) 8T		●				
(HCS) 6T			●			
(HCS) 4T				●		
(HCS) 2T					●	●

Fig.32

Blade speed selection chart		
1. 35 ~ 44 MPM Tool steel, stainless steel, Hard cast iron, Alloy steel, Hard bronze	**2. 45 ~ 59 MPM** Mild steel, Soft cast iron, Medium hard bronze, Hard aluminum.	**3. 60 ~ 85 MPM** Plastics, Soft and medium aluminum, Other light materials.

Fig.33

Evaluating cutting efficiency

Is the blade cutting efficiently? The best way to determine this is to observe the chips formed by the cutting blade.

If chip formation is powdery, then the feed rate is much too light, or the blade is dull.

If chips formed are curled, but colored — that is, either blue or straw-colored from heat generated during the cut — then the feed rate is too high.

If chips are slightly curled and are not colored by heat – the blade is sufficiently sharp and is cutting at its most efficient rate.

Maintenance

⚠WARNING Disconnect the cut-off saw from its electrical power source.

1. Keep all surfaces clean and free of rust, slag, chips.
2. Do not use compressed air to clean band saw. Compressed air may force chips into the guide bearings and other critical areas of the saw.
3. Use a small paint brush or parts cleaning brush to remove metal particles.
4. Wipe saw with a clean dry cloth and oil all unpainted surfaces with light machine oil.
5. Keep blade guides clean and free of metal chips.
6. Check guide bearings frequently to make sure they are properly adjusted and turning freely.

Lubrication

Lubricate the following components at the specified frequencies and using the lubricants defined as follows:

Ball Bearings – the bearings are lubricated and sealed – periodic lubrication is not required.

Blade Guide Bearing – the bearings are lubricated and sealed – periodic lubrication is not required.

Wheel Bushings – six to eight drops of oil each week.

Pivot Points, Shafts, and Bearing areas – six to eight drops of oil each week.

Troubleshooting

Fault	Probable Cause	Suggested remedy
Excessive blade breakage	1. Material loose in vise. 2. Incorrect speed or feed. 3. Teeth too coarse for material. 4. Incorrect blade tension. 5. Saw blade is in contact with work-piece before the saw is started. 6. Misaligned guides. 7. Cracking at weld.	1. Clamp work securely. 2. Check Machinist's Handbook for speed/feed appropriate for the material being cut. 3. Check Machinist's Handbook for recommended blade type. 4. Adjust blade tension to the point where the blade just does not slip on the wheel. 5. Start the motor before placing the saw on the work-piece. 6. Adjust guides. 7. Longer annealing cycle.
Premature blade dulling	1. Blade teeth too coarse. 2. Blade speed too high. 3. Inadequate feed pressure. 4. Hard spots in work-piece or scale on/in work-piece. 5. Work hardening of material (especially stainless steel). 6. Insufficient blade tension. 7. Operating saw without pressure on work-piece.	1. Use a finer tooth blade. 2. Try a lower blade speed. 3. Decrease spring tension. 4. Increase feed pressure (hard spots). Reduce speed, increase feed pre-sure (Scale). 5. Increase feed pressure by reducing spring tension. 6. Increase tension to proper level. 7. Do not run blade at idle in/on material.
Bad cuts (crooked)	1. Work-piece not square with blade. 2. Feed pressure too fast. 3. Guide bearings not adjusted properly. 4. Inadequate blade tension. 5. Span between the two blade guides too wide. 6. Dull blade. 7. Incorrect blade speed. 8. Blade guide assembly is loose. 9. Blade guide bearing assembly loose. 10. Blade track too far away from wheel flanges. 11. Guide bearing worn.	1. Adjust vise so it is square with the blade. (Always clamp the work-piece tightly in the vise.) 2. Decrease pressure. 3. Adjust guide bearing clearance to 0.001 inch (0.002 inch maximum). 4. Gradually increase blade tension. 5. Move blade guide bracket closer to work. 6. Replace blade. 7. Check blade speed. 8. Tighten blade guide assembly. 9. Tighten blade guide bearing assembly. 10. Adjust blade tracking. 11. Replace worn bearing.

Fault	Probable Cause	Suggested remedy
Bad cuts (rough)	1. Blade speed too high for feed pressure. 2. Blade is too coarse.	1. Reduce blade speed and feed pressure. 2. Replace with finer blade.
Blade is twisting	1. Blade is binding in the cut. 2. Blade tension too high	1. Decrease feed pressure. 2. Decrease tension on Blade
Unusual wear on side/back of blade	1. Blade guides worn 2. Blade guide bearings not adjusted. 3. Blade guide bearing bracket is loose.	1. Replace blade guides. 2. Adjust blade guide bearings. 3. Tighten blade guide bearing bracket.

Replacement Parts

Saw Table Assembly Drawing (1 of 3) - Exploded View

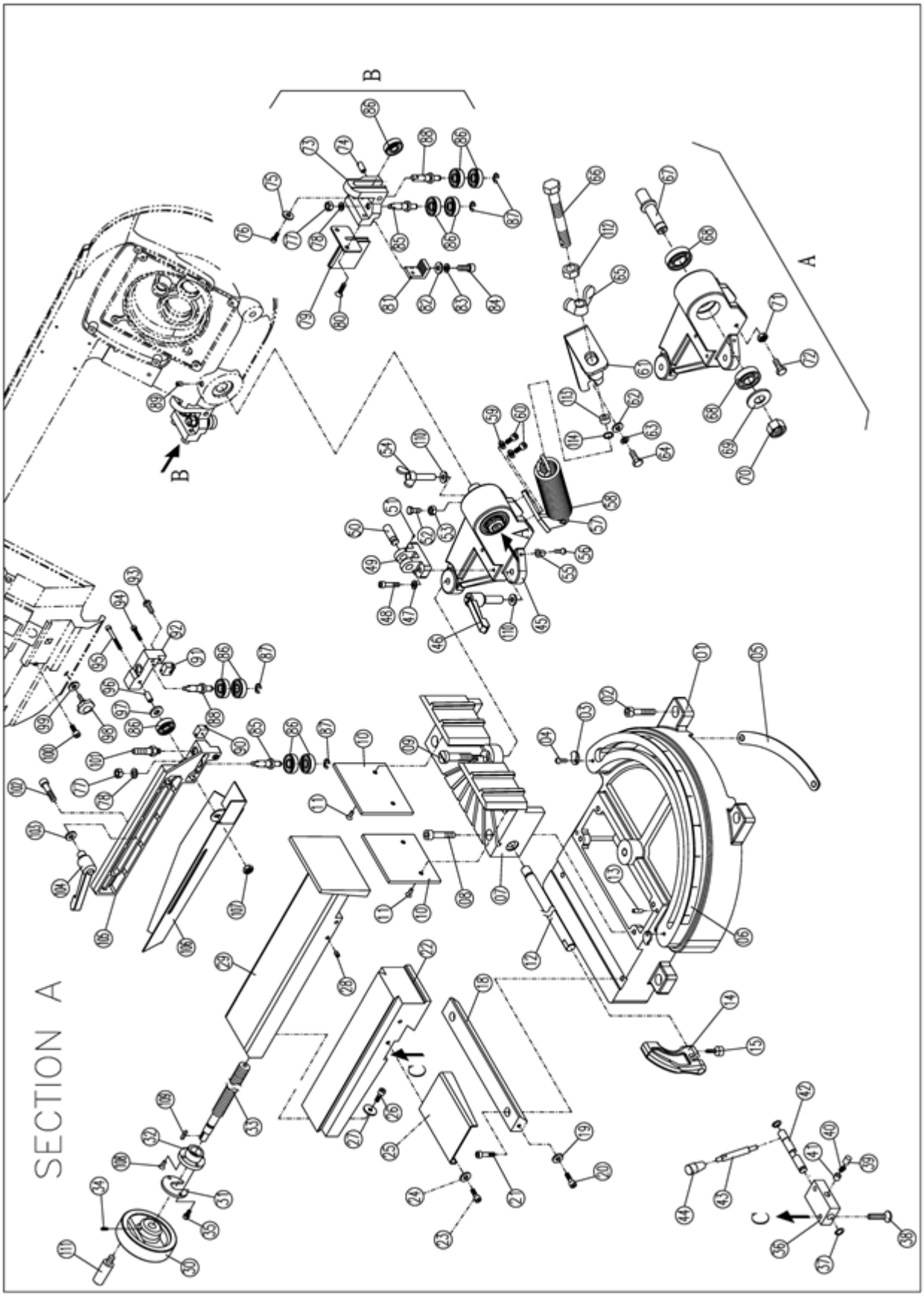

Saw Bow Assembly Drawing (2 of 3) - Exploded View

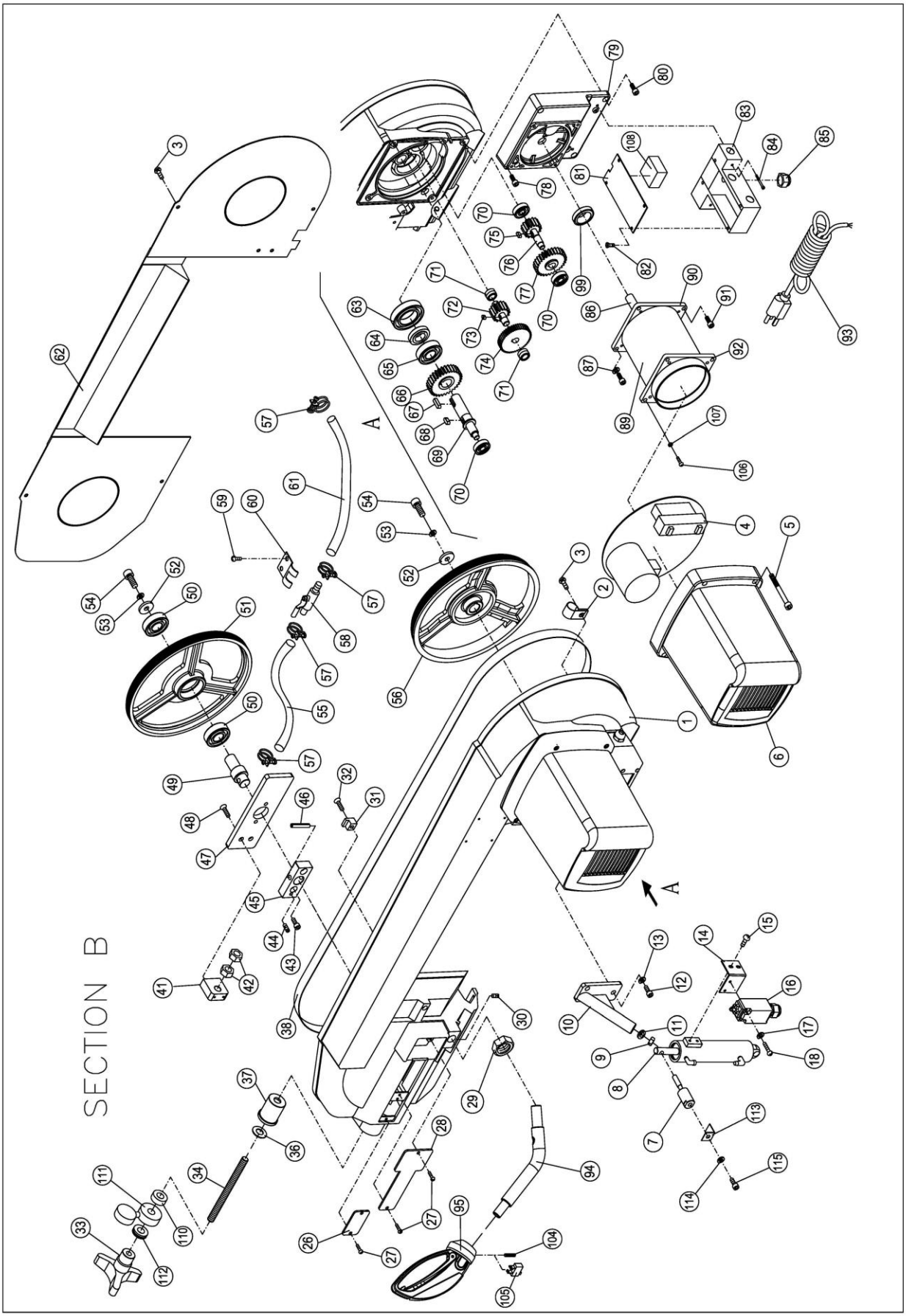

Saw Stand Assembly Drawing (3 of 3) - Exploded View

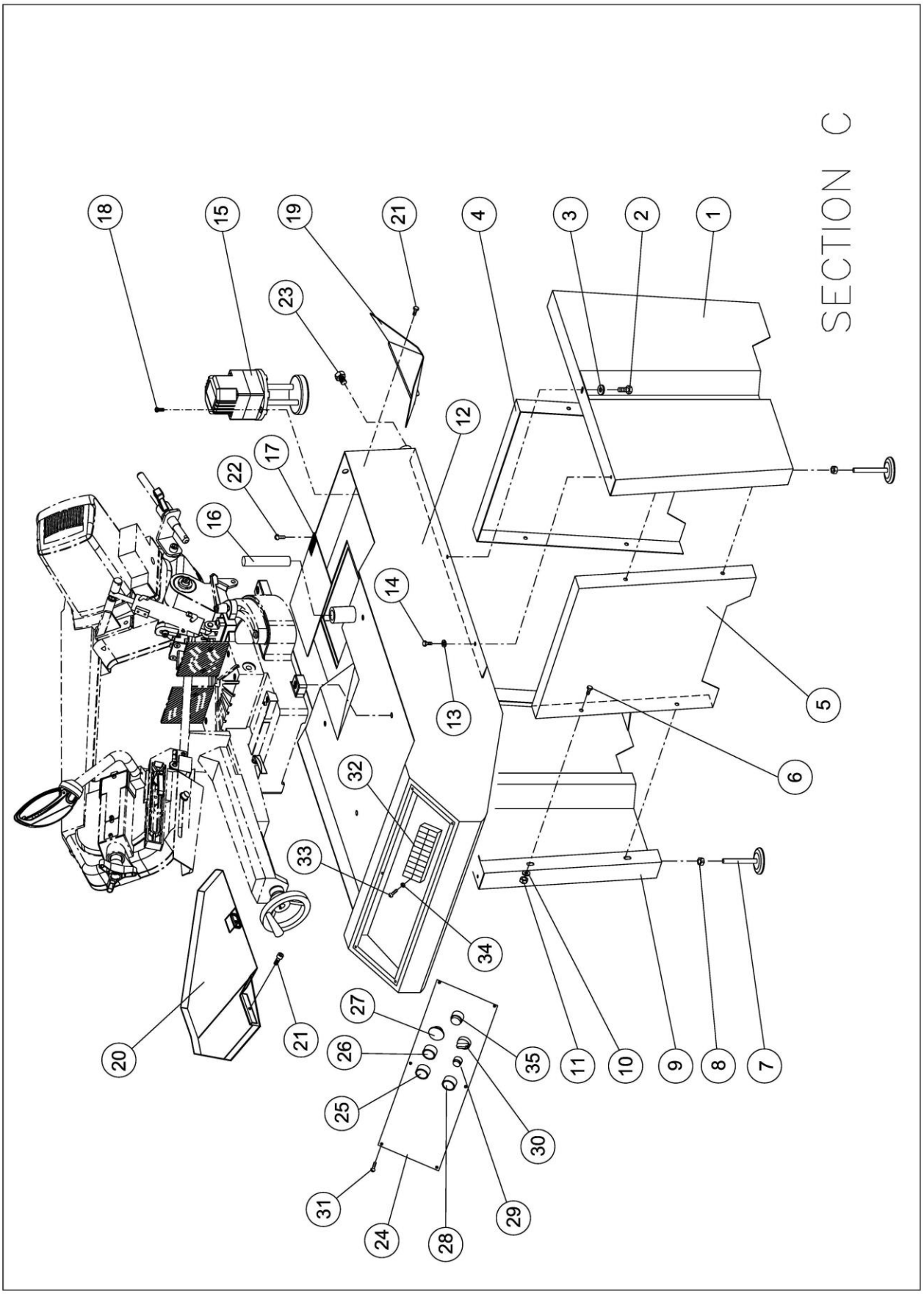

MBS-708CSB Part List

Index No.	Part No.	Description	Size	Q'ty
A1	MBS-708CSB-A1	Base		1
A2	MBS-708CSB-A2	Socket Head Cap Screw	M10x30	4
A3	MBS-708CSB-A3	Angle Plate		2
A4	MBS-708CSB-A4	Cross Round Head Screw	M5x10	2
A5	MBS-708CSB-A5	Swivel Plate		1
A6	MBS-708CSB-A6	Scale		1
A7	MBS-708CSB-A7	Vise Base		1
A8	MBS-708CSB-A8	Socket Head Cap Screw	M8x65	4
A9	MBS-708CSB-A9	Swiveling Shaft		1
A10	MBS-708CSB-A10	Vise Plate		2
A11	MBS-708CSB-A11	Cross Flat Head Screw	M6x12	4
A12	MBS-708CSB-A12	Shaft		1
A13	MBS-708CSB-A13	Pin	6x12	2
A14	MBS-708CSB-A14	Length Stop		1
A15	MBS-708CSB-A15	Thumb Screw	1/4x13	1
A18	MBS-708CSB-A18	Dovetail Gib		1
A19	MBS-708CSB-A19	Flat Washer	8x25x3	2
A20	MBS-708CSB-A20	Socket Head Cap Screw	M8x16	2
A21	MBS-708CSB-A21	Socket Head Cap Screw	M8x20	2
A22	MBS-708CSB-A22	Vise Base		1
A23	MBS-708CSB-A23	Socket Head Cap Screw	M8x20	2
A24	MBS-708CSB-A24	Flat Washer	8x18x2	2
A25	MBS-708CSB-A25	Plate		1
A26	MBS-708CSB-A26	Socket Head Cap Screw	M8x12	1
A27	MBS-708CSB-A27	Flat Washer	8x23x2	1
A28	MBS-708CSB-A28	Set Screw	M6x10	2
A29	MBS-708CSB-A29	Vise		1
A30	MBS-708CSB-A30	Handle Wheel	5"	1
A31	MBS-708CSB-A31	Lock Plate		1
A32	MBS-708CSB-A32	Vise Sleeve		1
A33	MBS-708CSB-A33	Lead Screw		1
A34	MBS-708CSB-A34	Set Screw	5/16x3/8	1
A35	MBS-708CSB-A35	Socket Head Cap Screw	M5x10	2
A36	MBS-708CSB-A36	Bracket		1
A37	MBS-708CSB-A37	C-Ring	S-15	2
A38	MBS-708CSB-A38	Pan Head Screw	M8x30	2
A39	MBS-708CSB-A39	Position Rod		1
A40	MBS-708CSB-A40	Spring	D8xd5.6x14L	1
A41	MBS-708CSB-A41	Position Rod		1
A42	MBS-708CSB-A42	Vise Eccentric Shaft		1
A43	MBS-708CSB-A43	Shaft		1
A44	MBS-708CSB-A44	Grip	5/16"	1
A45	MBS-708CSB-A45	Miter Plate		1
A46	MBS-708CSB-A46	Lock Handle	TRT-80 M8x50	1
A47	MBS-708CSB-A47	Spring Washer	M6	2
A48	MBS-708CSB-A48	Socket Head Cap Screw	M6x25	2
A49	MBS-708CSB-A49	Cylinder Lower Fixed Bracket		1
A50	MBS-708CSB-A50	Shaft		1
A51	MBS-708CSB-A51	Set Screw	M4x8	1
A52	MBS-708CSB-A52	Hex Cap Screw	M8x20	1
A53	MBS-708CSB-A53	Nut	M8x12x4.5	1
A54	MBS-708CSB-A54	Wing Screw	M8x40	1
A55	MBS-708CSB-A55	Pointer		1
A56	MBS-708CSB-A56	Cross Round Head Screw	M5x8	1

Index No.	Part No.	Description	Size	Q'ty
A57	MBS-708CSB-A57	Spring Lower Bracket		1
A58	MBS-708CSB-A58	Spring		1
A59	MBS-708CSB-A59	Spring Washer	M5	4
A60	MBS-708CSB-A60	Socket Head Cap Screw	M5x16	4
A61	MBS-708CSB-A61	Spring Upper Bracket		1
A62	MBS-708CSB-A62	Flat Washer	12x28x3	1
A63	MBS-708CSB-A63	Spring Washer	M12	1
A64	MBS-708CSB-A64	Hex Cap Screw	M12x30	1
A65	MBS-708CSB-A65	Wing Nut	M16	1
A66	MBS-708CSB-A66	Hex Cap Screw	M16x140	1
A67	MBS-708CSB-A67	Main Shaft		1
A68	MBS-708CSB-A68	Bearing	30304	2
A69	MBS-708CSB-A69	Special Washer		1
A70	MBS-708CSB-A70	Nylon Nut	M20x1.5	1
A71	MBS-708CSB-A71	Nut	M8	1
A72	MBS-708CSB-A72	Hex Cap Screw	M8x35	1
A73	MBS-708CSB-A73	Rear Guide Bearing Bracket		1
A74	MBS-708CSB-A74	Pin		1
A75	MBS-708CSB-A75	Flat Washer	8x18x2	1
A76	MBS-708CSB-A76	Socket Head Cap Screw	M8x30	1
A77	MBS-708CSB-A77	Nut	3/8x24	4
A78	MBS-708CSB-A78	Spring Washer	3/8	4
A79	MBS-708CSB-A79	Rear Blade Guard		1
A80	MBS-708CSB-A80	Cross Flat Head Screw	1/4x1/2	2
A81	MBS-708CSB-A81	Blade Guide Block		2
A82	MBS-708CSB-A82	Flat Washer	1/4"x13x1	2
A83	MBS-708CSB-A83	Spring Washer	1/4"	2
A84	MBS-708CSB-A84	Socket Head Cap Screw	1/4"x3/4"	2
A85	MBS-708CSB-A85	Center Shaft		2
A86	MBS-708CSB-A86	Bearing	608	10
A87	MBS-708CSB-A87	E-Ring	3CM1-8	4
A88	MBS-708CSB-A88	Eccentric Shaft		2
A89	MBS-708CSB-A89	Set Screw	M8x16	1
A90	MBS-708CSB-A90	Blade Guide Block R		1
A91	MBS-708CSB-A91	Blade Guide Block L		1
A92	MBS-708CSB-A92	Guide Bearing Side Bracket		1
A93	MBS-708CSB-A93	Tap Screw	M4x20	2
A94	MBS-708CSB-A94	Socket Head Cap Screw	M5x25	1
A95	MBS-708CSB-A95	Socket Head Cap Screw	M5x50	1
A96	MBS-708CSB-A96	Bearing Bush		1
A97	MBS-708CSB-A97	Flat Washer	5/16x16x1	1
A98	MBS-708CSB-A98	Knob	M8x16	1
A99	MBS-708CSB-A99	Flat Washer	8x18x2	1
A100	MBS-708CSB-A100	Socket Head Cap Screw	M6x12	1
A101	MBS-708CSB-A101	Copper Fitting	1/8PTx5/16	1
A102	MBS-708CSB-A102	Socket Head Cap Screw	M8x40	1
A103	MBS-708CSB-A103	Flat Washer	8x23x2	1
A104	MBS-708CSB-A104	Lock Handle	M8	1
A105	MBS-708CSB-A105	Front Guide Bearing Bracket		1
A106	MBS-708CSB-A106	Front Blade Guard		1
A107	MBS-708CSB-A107	Nut	M5	1
A108	MBS-708CSB-A108	Pan Head Screw	M4x12	2
A109	MBS-708CSB-A109	Key	5x5x20	1
A110	MBS-708CSB-A110	Flat Washer	8x18x2	2
A111	MBS-708CSB-A111	Handle	5/16	1
A112	MBS-708CSB-A112	Nut	M16x24x8P	2

Index No.	Part No.	Description	Size	Q'ty
A113	MBS-708CSB-A113	Bush		1
A114	MBS-708CSB-A114	C Ring	R-25	1
B1	MBS-708CSB-B1	Bow		1
B2	MBS-708CSB-B2	Cable Tie		4
B3	MBS-708CSB-B3	Cross Round Head Screw	M5x10	7
B4	MBS-708CSB-B4	Motor Relay		1
B5	MBS-708CSB-B5	Socket Head Cap Screw	M5x35	4
B6	MBS-708CSB-B6	Plastic Cover		1
B7	MBS-708CSB-B7	Axle		1
B8	MBS-708CSB-B8	Hydraulic Cylinder		1
B9	MBS-708CSB-B9	Nut	M8	1
B10	MBS-708CSB-B10	Upper Bracket		1
B11	MBS-708CSB-B11	Flat Washer	8x18x2	1
B12	MBS-708CSB-B12	Socket Head Cap Screw	M8x20	2
B13	MBS-708CSB-B13	Spring Washer	M8	2
B14	MBS-708CSB-B14	Bracket		1
B15	MBS-708CSB-B15	Socket Head Button Screw	M5x6	2
B16	MBS-708CSB-B16	Limit Switch	QKS8-9	1
B17	MBS-708CSB-B17	Spring Washer	M5	4
B18	MBS-708CSB-B18	Cross Round Head Screw	M5x30	2
B26	MBS-708CSB-B26	Tension Cover		1
B27	MBS-708CSB-B27	Cross Round Head Screw	M4x8	4
B28	MBS-708CSB-B28	Plate		1
B29	MBS-708CSB-B29	Nut	M16	1
B30	MBS-708CSB-B30	Set Screw	M6x8	1
B31	MBS-708CSB-B31	Slide Bracket		4
B32	MBS-708CSB-B32	Socket Head Flat Screw	M6x20	4
B33	MBS-708CSB-B33	Tension Handle		1
B34	MBS-708CSB-B34	Lead Screw	M12x170	1
B36	MBS-708CSB-B36	Tap Washer		12
B37	MBS-708CSB-B37	Bushing		1
B38	MBS-708CSB-B38	Blade	19x0.9x2285	1
B41	MBS-708CSB-B41	Adjustment Bracket		1
B42	MBS-708CSB-B42	Nut	M12	2
B43	MBS-708CSB-B43	Socket Head Cap Screw	M8x16	2
B44	MBS-708CSB-B44	Set Screw	M8x16	1
B45	MBS-708CSB-B45	Fixed Bracket		1
B46	MBS-708CSB-B46	Spring Pin	ø8x30	1
B47	MBS-708CSB-B47	Tension Slide Bracket		1
B48	MBS-708CSB-B48	Socket Head Flat Screw	M8x25	2
B49	MBS-708CSB-B49	Shaft		1
B50	MBS-708CSB-B50	Bearing	6204	2
B51	MBS-708CSB-B51	Saw Wheel		1
B52	MBS-708CSB-B52	Flat Washer	8x25x3	2
B53	MBS-708CSB-B53	Spring Washer	M8	2
B54	MBS-708CSB-B54	Socket Head Cap Screw	M8x20	2
B55	MBS-708CSB-B55	Hose	540mm	1
B56	MBS-708CSB-B56	Rear Saw Wheel		1
B57	MBS-708CSB-B57	Hose Clamp	5/16"	4
B58	MBS-708CSB-B58	Valve	5/16"	1
B59	MBS-708CSB-B59	Cross Round Head Screw	M5x10	2
B60	MBS-708CSB-B60	Brace		1
B61	MBS-708CSB-B61	Hose	1660mm	1
B62	MBS-708CSB-B62	Cover		1
B63	MBS-708CSB-B63	Ball Bearing	6007	1
B64	MBS-708CSB-B64	Bushing		1

Index No.	Part No.	Description	Size	Q'ty
B65	MBS-708CSB-B65	Bearing	6204	1
B66	MBS-708CSB-B66	Output Gear		1
B67	MBS-708CSB-B67	Key	6x6x20	1
B68	MBS-708CSB-B68	Key	6x6x4	1
B69	MBS-708CSB-B69	Output Shaft		1
B70	MBS-708CSB-B70	Ball Bearing	6200	3
B71	MBS-708CSB-B71	Taper Bearing	6801	4
B72	MBS-708CSB-B72	Gear Shaft		1
B73	MBS-708CSB-B73	Key	5x5x8.2	1
B74	MBS-708CSB-B74	Reducer Gear		1
B75	MBS-708CSB-B75	Key	5x5x12	1
B76	MBS-708CSB-B76	Guide Shaft		1
B77	MBS-708CSB-B77	Guide Gear		1
B78	MBS-708CSB-B78	Socket Head Cap Screw	M6x40	2
B79	MBS-708CSB-B79	Gear Box		1
B80	MBS-708CSB-B80	Socket Head Cap Screw	M6x20	2
B81	MBS-708CSB-B81	Cover		1
B82	MBS-708CSB-B82	Pan Head Screw	M4x8	4
B83	MBS-708CSB-B83	Wiring Box		1
B84	MBS-708CSB-B84	Cross Round Head Screw	M5x45	2
B85	MBS-708CSB-B85	Wire Locker	PG-9	3
B86	MBS-708CSB-B86	Motor Shaft		1
B87	MBS-708CSB-B87	Spring Washer	M6	4
	MBS-708CSB-MA	Motor Assembly (including B4,B86,B89,B90,B92)	0.75kW 1Ph 230V	1
B89	MBS-708CSB-B89	Motor Housing		1
B90	MBS-708CSB-B90	Motor Front Cover		1
B91	MBS-708CSB-B91	Socket Head Cap Screw	M6x16	4
	MBS-708CSB-MRA	Motor Relay Assembly (including B4,B92)		1
B92	MBS-708CSB-B92	Motor Rear Cover		1
B93	MBS-708CSB-B93	Power Cord		1
B94	MBS-708CSB-B94	Tube		1
	MBS-708CSB-THA	Trigger Handle Assembly (including B95,B104,B105)		1
B95	MBS-708CSB-B95	Trigger Handle		1
B99	MBS-708CSB-B99	Oil Seal	TC15225	1
B104	MBS-708CSB-B104	Set Screw	M6x12	1
B105	MBS-708CSB-B105	Limit Switch		1
B106	MBS-708CSB-B106	Cross Round Head Screw	M5x15	1
B107	MBS-708CSB-B107	Nut	M5	1
B108	MBS-708CSB-B108	Contactor	JD-6	1
B110	MBS-708CSB-B110	Spacer		1
B111	MBS-708CSB-B111	Blade Tension Gauge		1
B112	MBS-708CSB-B112	Thrust Bearing	51103	1
B113	MBS-708CSB-B113	Shut-off Bracket		1
B114	MBS-708CSB-B114	Spring Washer	M6	1
B115	MBS-708CSB-B115	Socket Head Cap Screw	M6x12	1
C01	MBS-708CSB-C01	Right Stand		1
C02	MBS-708CSB-C02	Hex Cap Screw	M8x16	2
C03	MBS-708CSB-C03	Flat Washer	M8x18x2	2
C04	MBS-708CSB-C04	Rear Stand		1
C05	MBS-708CSB-C05	Front Stand		1
C06	MBS-708CSB-C06	Hex Cap Screw	M8x16	8
C07	MBS-708CSB-C07	Level Pad	1/2"	2
C08	MBS-708CSB-C08	Nut	1/2"	2
C09	MBS-708CSB-C09	Left Stand		1
C10	MBS-708CSB-C10	Flat Washer	M8x18x2	8
C11	MBS-708CSB-C11	Nut	M8	8

Index No.	Part No.	Description	Size	Q'ty
C12	MBS-708CSB-C12	Water Tray		1
C13	MBS-708CSB-C13	Flat Washer	M8x18x2	2
C14	MBS-708CSB-C14	Hex Cap Screw	M8x16	2
C15	MBS-708CSB-C15	Pump	32W 1Ph 230V	1
C16	MBS-708CSB-C16	Position Rod		1
C17	MBS-708CSB-C17	Screen		1
C18	MBS-708CSB-C18	Big Round Head Screw	M6x25	2
C19	MBS-708CSB-C19	Chip Tray		1
C20	MBS-708CSB-C20	Chip Tray		1
C21	MBS-708CSB-C21	Socket Head Cap Screw	M5x10	4
C22	MBS-708CSB-C22	Cross Round Head Screw	M4x6	2
C23	MBS-708CSB-C23	Drain Plug	3/8"PT	1
C24	MBS-708CSB-C24	Control Panel		1
C25	MBS-708CSB-C25	Start Switch		1
C26	MBS-708CSB-C26	Stop Switch		1
C27	MBS-708CSB-C27	Emergency Stop Switch		1
C28	MBS-708CSB-C28	Cutting Mode Selection Switch		1
C29	MBS-708CSB-C29	Blade Speed Knob		1
C30	MBS-708CSB-C30	Coolant ON/OFF Switch		1
C31	MBS-708CSB-C31	Cross Round Head Screw	M5x8	6
C32	MBS-708CSB-C32	Terminal Connector		1
C33	MBS-708CSB-C33	Cross Round Head Screw	M5x10	3
C34	MBS-708CSB-C34	Nut	M5	3
C35	MBS-708CSB-C35	Down-Feed Control Valve		1

Wiring Diagrams

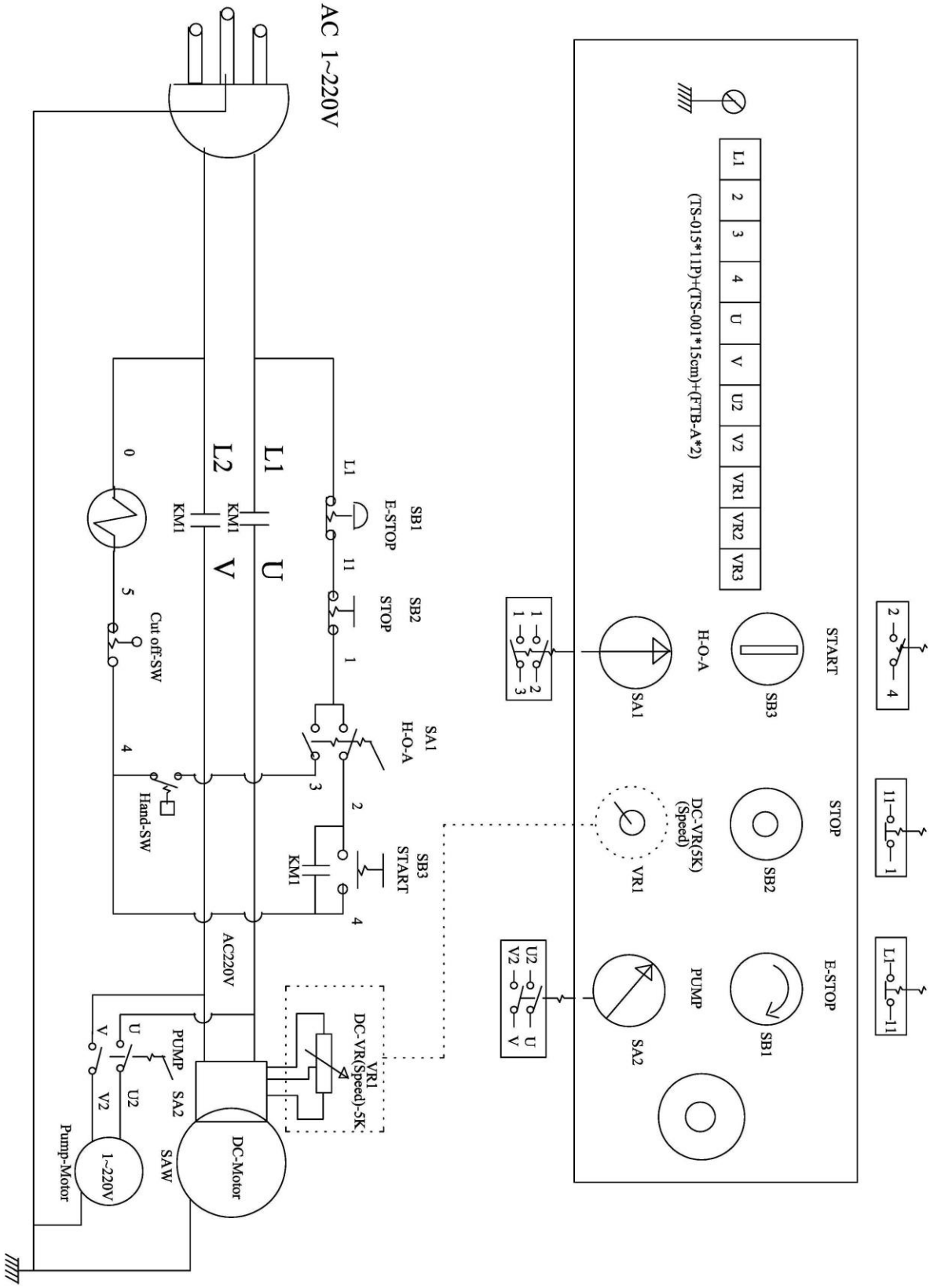

MBS-708CSB Electrical Appliance Description

Symbol	DESCRIPTION	FUNCTION	BRAND NO.	SPECIFICATION
KM1	Magnetic Switch	On/Off Switch (for Auto mode)	JD-6 (KEDU)	IP54:240VAC CE
	Cable	Supply Cable	H07RN-F	3G/1.0mm² CE
SB3	Push Button (ON)	Magnetic ON	NPB22-F (NHD)	UI 600V Ith 5A CE
SB2	Push Button (OFF)	Magnetic OFF	NPB22-R (NHD)	UI 600V Ith 10A CE
SA1	Select Switch	Manual/Auto Mode	NSS22-S (NHD)	UI 600V Ith 10A CE
SA2	Select Switch	Pump On/Off	NSS22-S (NHD)	UI 600V Ith 10A CE
DC Motor	Motor		DC Motor	0.75kW/230V/1PH
Hand-SW	Trigger Switch	Start/Off (for manual mode)	CW100D	20.5A 125 / 250 VAC CE
Pump	Pump	Coolant	N/A	230VAC CE
Cut off-SW	Limit Switch	Stop (Auto Shut Off)	QKS8 (KEDU)	AC-15 250VAC CE IP54
SB1	E-Stop	Emergency Stop Switch	NSS22-F (NHD)	UI 600V Ith 10A CE
VR1	VR Switch	Variable Speed	N/A	B5KΩ